Supplement to IEEE Standard for Information technology— Telecommunications and information exchange between systems— Local and metropolitan area networks— Specific requirements—

Part 11: Wireless LAN Medium Access Control (MAC) and Physical Layer (PHY) specifications:

Further Higher-Speed Physical Layer Extension in the 2.4 GHz Band

Sponsor
LAN/MAN Standards Committee
of the
IEEE Computer Society

Copyright © 2001 by the Institute of Electrical and Electronics Engineers,,Inc.
345 East 47th Street
New York,NY 10017,USA
All rights reserved.

This is an unapproved draft of a proposed IEEE Standard,subject to change.Permission is hereby granted for IEEE Standards Committee participants to reproduce this document for purposes of IEEE standardization activities.If this document is to be submitted to ISO or IEC,notification shall be given to the IEEE Copyright Administrator.Permission is also granted for member bodies and technical committees of ISO and IEC to reproduce this document for purposes of developing a national position.Other entities seeking permission to reproduce this document for standardization or other activities,or to reproduce portions of this document for these or other uses,must contact the IEEE Standards Department for the appropriate license.Use of information contained in this unapproved draft is at your own risk.

IEEE Standards Department
Copyright and Permissions
445 Hoes Lane,P.O.Box 1331
Piscataway,NJ 08855-1331,USA

Mandatory Portion of the Proposal

The radio portion of the 802.11g systems must implement all mandatory modes of the IEEE802.11b standard. In addition, it is mandatory that all 802.11g compliant equipment be capable of using the short preamble option described in the 802.11b standard. Also, compliant equipment must implemnent all mandatory modes of the IEEE802.11a standard using the same frequency channelization specified in the 802.11b.

Optional Portion of the Proposal

In addition to the mandatory modes, the following modes are included as optional modes for the 2.4 GHz band:

- CCK-OFDM as defined in Appendix A.
- PBCC-22 and PBCC-33 as defined in Appendix G

1.0 Changes required to implement the mandatory portion

1.1 Service Field Changes

To accommodate the optional modes of the standard, the following Service Field should be used for 802.11b transmissions.

1.2 High Rate PLCP sublayer

1.2.1 Overview

This subclause provides a convergence procedure for the 2, 5.5, and 11 Mbps mandatory 802.11b modes, the optional PBCC-22 and PBCC-33 optional modes, and the optional CCK-OFDM modes at 6, 9, 12, 18, 24, 36, 48, and 54 Mbit/s specification in which PSDUs are converted to and from PPDUs. During transmission, the PSDU shall be appended to a PLCP preamble and header to create the PPDU. Two different mandatory supported preambles and headers are defined: the long preamble and header which interoperates with the 1 and 2 Mbit/s DSSS specification as described in IEEE Std 802.11-1999, and the short preamble and header as described in IEEE Std 802.11b-1999. At the receiver, the PLCP preamble and header are processed to aid in demodulation and delivery of the PSDU.

The short preamble and header is intended for applications where maximum throughput is desired and interoperability with legacy and non-short preamble capable equipment is not a consideration. That is, it is expected to be used only in networks of like equipment that can all handle the mode.

1.2.3.3 Long PLCP Signal (SIGNAL) field

The 8-bit signal field indicates to the PHY the modulation that shall be used for transmission (and reception) of the PSDU. The High Performance PHY supports five mandatory rates given by the following 8 bit words where the lsb shall be transmitted first in time:

a) X’0A’ (msb to lsb) for 1 Mbit/s
b) X’14’ (msb to lsb) for 2 Mbit/s
c) X’37’ (msb to lsb) for 5.5 Mbit/s
d) X’6E’ (msb to lsb) for 11 Mbit/s
e) X’DC’ (msb to lsb) for 22 Mbit/s
f) X’21’ (msb to lsb) for 33 Mbit/s

The High Performance PHY rate change capability is described in g.2.3.14. This field shall be protected by the CCITT CRC-16 frame check sequence described in G.2.3.6.

1.2.3.4 Long PLCP SERVICE (SERVICE) field

Six bits have been defined in the SERVICE field to support the high performance extension. The three right most bits (bits 5, 6 and 7) shall be used to supplement the LENGTH field described in G.2.3.5. Bit 3 shall be used to indicate whether the modulation method is CCK <0> or PBCC <1> as shown in Table 1. Bit 2 is used to indicate that the transmit frequency and symbol clocks are derived from the same oscillator. For an 802.11g-compliant device, this Locked Clocks bit shall be set to 1. The bit b0 if set to 1 indicates the modulation mode is CCK-OFDM.

The SERVICE field shall be transmitted b0 first in time and shall be protected by the CCITT CRC-16 frame check sequence described in the IEEE802.11b standard. An IEEE802.11 compliant device shall set the values of the bit b4 to 0.

Table 1. SERVICE field definitions

b0	b1	B2	b3	b4	b5	b6	b7
CCK-OFDM Bit	Reserved	Locked Clocks Bit 0 = not 1 = locked	Mod. Selection Bit 0 = CCK 1 = PBCC	Reserved	Length Extension Bit 0	Length Extension Bit 1	Length Extension Bit 2

1.2.3.10 Short PLCP SIGNAL Field (shortSignal)
The 8 bit SIGNAL Field of the short header indicates to the PHY the data rate which shall be used for transmission (and reception) of the PSDU. A PHY operating with a HP/DSSS/short preamble supports four mandatory rates given by the following 8 bit words, where the lsb shall be transmitted first in time and the number represents the rate in units of 100 kBit/s:

a) X'14'(msb to lsb) for 2 Mbit/s
b) X'37'(msb to lsb) for 5.5 Mbit/s
c) X'6E'(msb to lsb) for 11 Mbit/s
d) X'DC'(msb to lsb) for 22 Mbit/s
e) X'21'(msb to lsb) for 33 Mbit/s

1.2.3.11 Short PLCP SERVICE Field (shortService)
The SERVICE field in the short header shall be the same as the SERVICE field described in the IEEE802.11b standard.
1.2.3.12 Short PLCP Length Field (shortLENGTH)
The LENGTH field in the short header shall be the same as the LENGTH field described in the IEEE802.11b standard.

Appendix A: CCK-OFDM Optional Mode

Abstract

Our proposed high-rate standard merges the legacy 2.4 GHz IEEE 802.11 and 802.11b networks to 5 GHz IEEE 802.11a standard, which drastically increases data rates by employing orthogonal frequency division (OFDM) modulation. Thus, the combined benefits of an advanced multipath tolerant waveform and extended rates to 54 Mbit/s are achieved within any existing 802.11 or 802.11b compliant network.

This optional mode provides systems the ability to use OFDM in a mode that is fully compatible with existing 802.11b compliant networks. Compatibility is ensured through use of legacy 802.11b long and short preambles and inclusion of a signal extension field to accommodate a modest increase in latency. This design ensures existing clear channel assessment (CCA) and short interframe spacing interval (SIFS) function properly when new and legacy devices interoperate.

4. Abbreviations and acronyms

Insert the following abbreviations alphabetically in the list in Clause 4:

BPSK	binary phase shift keying
C-MPDU	coded MPDU
FFT	Fast Fourier Transform
GI	guard interval
IFFT	inverse Fast Fourier Transform
OFDM	orthogonal frequency division multiplexing
PER	packet error rate
QAM	quadrature amplitude modulation
QPSK	quadrature phase shift keying
U-NII	unlicensed national information infrastructure

7.3.1.4 Capability Information field

[Editor's Note] This section should revise the list of subfields to include OFDM and provide definition of new subfield allocations The new capability is CCK-OFDM. For the optional 802.11a mode, the capability information field will be the same as used in 802.11a networks. The existing field is shown here.

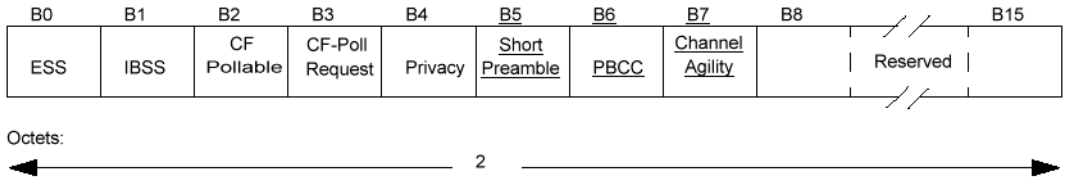

7.3.1.9 Status Code field

[Editor's Note] This section should revise table 19 to include an Extended Rate OFDM status code.

9.1 Multirate support

[Editor's Note] This section should be revised to include reference to the associated new TXTIME calculation description.

Add the following text to the end of 9.6:

.

10.4.4 PLME_DSSTESTMODE

[Editor's Note] This section should add additional switches for Extended Rate OFDM.

Add Clause 19 as follows:

19. Extended Rate, orthogonal frequency division multiplexing PHY specification

19.1 Overview

This clause specifies the Extended Rate extension of the PHY for the Direct Sequence Spread Spectrum (DSSS) system (Clause 15 of IEEE Std 802.11, 1999 Edition), hereinafter known as the Extended Rate PHY for the 2.4 GHz band designated for ISM applications.

This extension of the DSSS system builds on the existing payload data rates of 1, 2, 5.5, and 11 Mbps, as described in Clause 15 of IEEE Std 802.11 and clause 18 of IEEE Std 802.11b, 1999 Edition, to provide 6, 9, 12, 18, 24, 36, 48, and 54 Mbit/s payload data rates. Of these added rates, the support of 6, 12, and 24 Mbit/s data rates is mandatory. The modulation used to provide the extended rates is orthogonal frequency division multiplexing (OFDM). The new capability described in this clause is called Extended Rate Orthogonal Frequency Division Multiplexing (ER/OFDM). The Extended Rate PHY uses the same PLCP preamble and header as the DSSS PHY, so all PHYs can co-exist in the same BSS and can use the rate switching mechanism as provided. Furthermore, the short preamble of IEEE Std 802.11b is included as an option. Immediately following these current preambles, an OFDM-specific preamble based on the 802.11a preamble is transmitted. Following the OFDM-specific preamble, OFDM modulation using 52 subcarriers modulated using binary or quadrature phase shift keying (BPSK/QPSK), 16-quadrature amplitude modulation (QAM), or 64-QAM. Interleaving, data scrambling, and forward error correction coding are applied to the data bits prior to modulation in a manner identical to that of IEEE Std. 802.11a. Code rates of 1/2, 2/3, and 3/4 are obtained by puncturing a rate 1/2 convolutional code. The same occupied channel bandwidth as IEEE Std 802.11b is provided by the Extended Rate OFDM system. To provide compatibility within the existing SIFs intervals found in IEEE Std 802.11b, an additional null data field with a duration of 6 microseconds is transmitted after the data symbols. Appendix AA specifies the radio and physical layer behavior of the transition from the Barker word modulated preamble and the OFDM modulated data.

19.1.1 Scope

This clause specifies the PHY entity for the ER/OFDM extension and the changes required in the base standard to accommodate the Extended Rate PHY.

The Extended Rate PHY layer consists of the following two protocol functions:

a) A physical layer convergence function, which adapts the capabilities of the physical medium dependent (PMD) system to the PHY service. This function is supported by the PHY layer convergence procedure (PLCP), which defines a method for mapping the MAC sublayer protocol data units (MPDU) into a framing format suitable for sending and receiving user data and management information between two or more STAs using the associated PMD system. The PHY exchanges PHY protocol data units (PPDU) that contains PLCP service data units (PSDU). The MAC uses the PHY service, so each MPDU corresponds to a PSDU that is carried in a PPDU.

b) A PMD system, whose function defines the characteristics and method of transmitting and receiving data through a wireless medium between two or more STAs, each using the Extended Rate PHY system.

19.1.2 Extended Rate PHY functions

The 2.4 GHz Extended Rate PHY architecture is depicted in the ISO/IEC basic reference model shown in Figure 137. The Extended Rate PHY contains three functional entities: the PMD function, the PHY convergence function, and the layer management function. Each of these functions is described in detail in 19.1.2.1, 19.1.2.2, and 19.1.2.3. For the purposes of MAC and MAC management, when Channel Agility is both present and enabled, the Extended Rate PHY shall be interpreted to be both an Extended Rate and a frequency-hopping PHY.

The Extended Rate PHY service shall be provided to the MAC through the PHY service primitives described in Clause 12 of IEEE Std 802.11, 1999 Edition.

19.1.2.1 PLCP sublayer

To allow the MAC to operate with minimum dependence on the PMD sublayer, a PLCP sublayer is defined. This function simplifies the PHY service interface to the MAC services.

19.1.2.2 PMD sublayer

The PMD sublayer provides a means and method of transmitting and receiving data through a wireless medium between two or more STAs, each using the Extended Rate system.

19.1.2.3 PHY management entity (PLME)

The PLME performs management of the local PHY functions in conjunction with the MAC management entity.

19.1.3 Service specification method and notation

The models represented by figures and state diagrams are intended to be illustrations of functions provided. It is important to distinguish between a model and a real implementation. The models are optimized for simplicity and clarity of presentation; the actual method of implementation is left to the discretion of the Extended Rate PHY compliant developer.

The service of a layer or sublayer is a set of capabilities that it offers to a user in the next-higher layer (or sublayer). Abstract services are specified here by describing the service primitives and parameters that characterize each service. This definition is independent of any particular implementation.

19.2 Extended Rate PLCP sublayer

19.2.1 Overview

This subclause provides a convergence procedure for the Extended Rate date rates specification, in which PSDUs are converted to and from PPDUs. This subclause covers the mandatory long preamble and optional short preamble mode. During transmission, the PSDU shall be appended to a PLCP preamble and header to create the PPDU. Two different preambles and headers are defined in this subclause: the mandatory Long Preamble and header originally defined in IEEE Std 802.11 and Short Preamble and header originally defined in IEEE Std 802.11b. At the receiver, the PLCP preamble and header are processed to aid in demodulation and delivery of the PSDU.

The Short Preamble and header are intended for applications where high throughput is desired and interoperability with non-short-preamble capable equipment is not a consideration. That is, the optional short preamble is to be used only in networks of like equipment, which can all handle the optional mode.

19.2.2 PPDU format

Two different preambles and headers are defined in this Subclause: the mandatory supported Long Preamble and header which are interoperable with the current 1 Mbit/s and 2 Mbit/s DSSS specification (as described in IEEE Std 802.11, 1999 Edition) and an optional Short Preamble and header.

19.2.2.1 Long PLCP PPDU format

Figure *** shows the format for the interoperable (long) PPDU, including the Extended Rate PLCP preamble, the Extended Rate PLCP header, and the PSDU. The PLCP preamble contains the following fields: synchronization

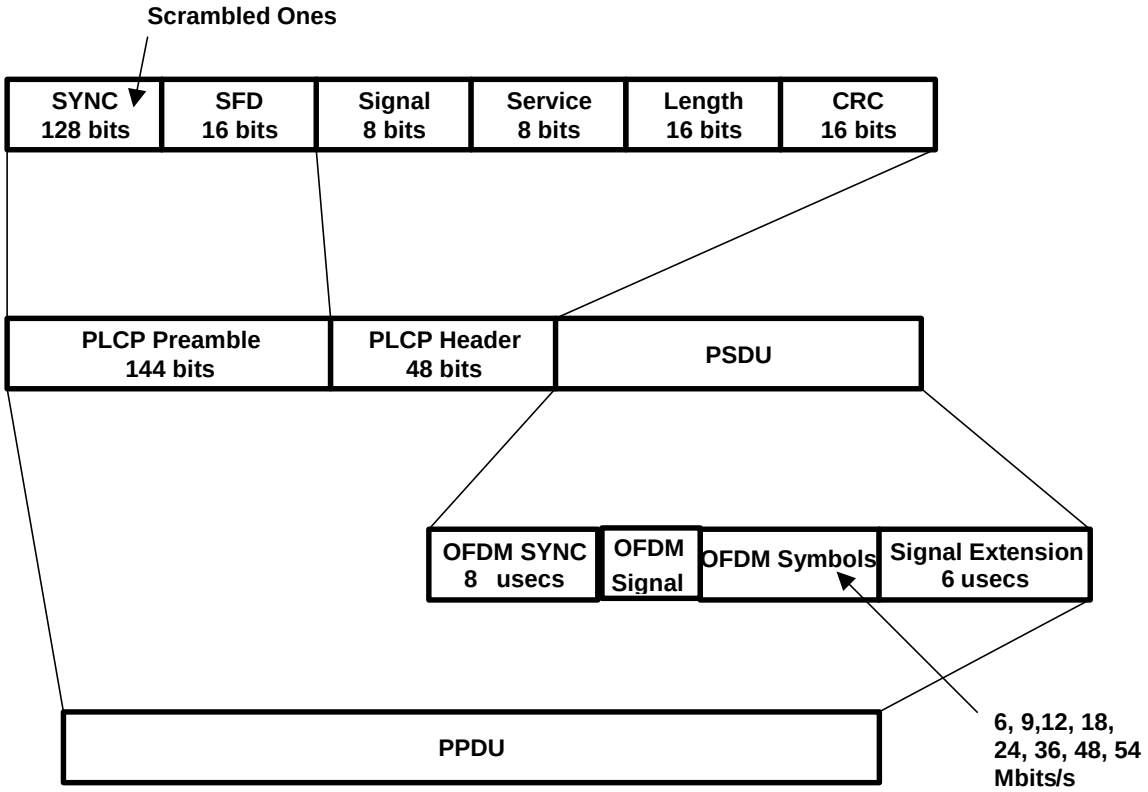

(Sync) and start frame delimiter (SFD). The PLCP header contains the following fields: signaling (SIGNAL), service (SERVICE), length (LENGTH), and CCITT CRC-16. Each of these fields is described in detail in 19.2.3. The format for the PPDU, including the long Extended Rate PLCP preamble, the long Extended Rate PLCP header, and the PSDU, do not differ from IEEE Std 802.11, 1999 Edition for 1Mbit/s and 2 Mbit/s.

The only exception is the use of an additional bit in the SERVICE field to denote an OFDM transmission.

Figure * —Long PLCP PPDU format**

19.2.2.2 Short PLCP PPDU format (optional)

The short PLCP preamble and header (HR/DSSS/short) are defined as optional. The Short Preamble and header may be used to minimize overhead and, thus, maximize the network data throughput. The format of the PPDU, with HR/DSSS/short, is depicted in Figure ***.

Figure * —SHORT PLCP PPDU format**

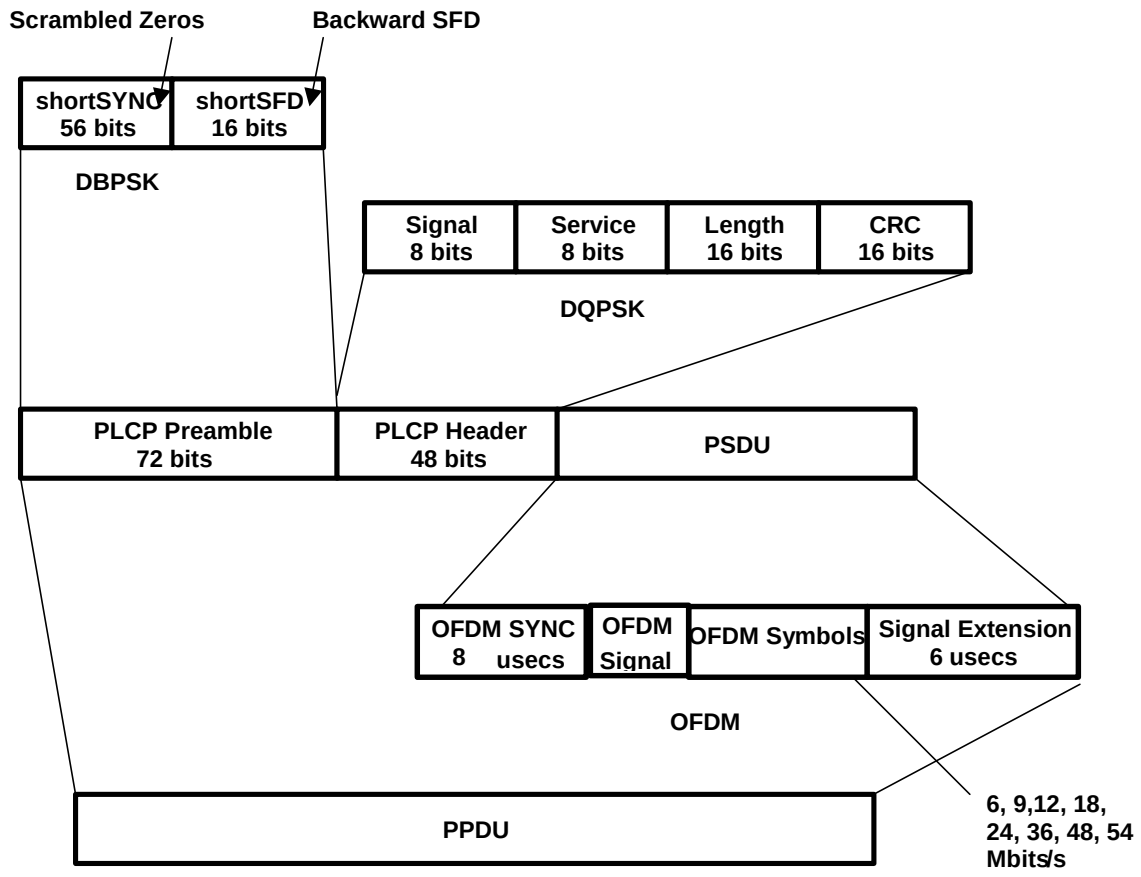

The short PLCP preamble uses the 1 Mbit/s Barker code spreading with DBPSK modulation. The short PLCP header uses the 2 Mbit/s Barker code spreading with DQPSK modulation, and the PSDU is transmitted using OFDM at 6, 9, 12, 18, 24, 36, 48, or 54 Mbit/s. A STA transmitting the short PLCP will only be interoperable with another STA capable of receiving this short PLCP. To interoperate with a STA that is incapable of receiving a Short Preambleand header, the transmitter shall use the long PLCP preamble and header.

Stations without this option but perform active scanning will get a response even when the network is using Short Preambles, because all management traffic is returned with the same type preamble as received.

19.2.3 PLCP PPDU field definitions

In the PLCP, field definition subclauses (19.2.3.1 through 19.2.3.14), the definitions of the long (Clause 15) PLCP fields are given first, followed by the definitions of the short PLCP. The names for the short PLCP fields are preceded by the term “short.”

19.2.3.1 Long PLCP SYNC field

The SYNC field shall consist of 128 bits of scrambled “1” bits. This field is provided so the receiver can perform the necessary synchronization operations. The initial state of the scrambler (seed) shall be [1101100], where the leftmost bit specifies the value to put in the first delay element (Z^{1}) in Figure ***, and the right-most bit specifies the value to put in the last delay element in the scrambler.

To support the reception of DSSS signals generated with implementations based on Clause 15, the receiver shall also be capable of synchronization on a SYNC field derived from any non-zero scrambler initial state.

19.2.3.2 Long PLCP SFD

The SFD shall be provided to indicate the start of PHY-dependent parameters within the PLCP preamble.

The SFD shall be a 16-bit field, [1111 0011 1010 0000], where the rightmost bit shall be transmitted first in time.

19.2.3.3 Long PLCP SIGNAL field

The 8-bit SIGNAL field indicates to the PHY the modulation that shall be used for transmission (and reception) of the PSDU. For support of 1, 2, 5.5, and 11 Mbits/second data rates of IEEE Std 802.11 and IEEE Std 802.11b, 1999 Edition, the data rate shall be equal to the SIGNAL field value multiplied by 100 kbit/s. For all rates in the extended OFDM rate set this value will be set to X'14'which corresponds to the 2Mbps rate. The set of possible values are given by the following 8-bit words

a) X'0A' (msb to lsb) for 1 Mbit/s;

b) X'14' (msb to lsb) for 2 Mbit/s;

c) X'37' (msb to lsb) for 5.5 Mbit/s;

d) X'6E' (msb to lsb) for 11 Mbit/s;

e) X'14' (msb to lsb) for all OFDM data rates.

The Extended Rate PHY rate change capability is described in 19.2.3.14. This field shall be protected by the CCITT CRC-16 frame check sequence described in 19.2.3.6.

19.2.3.4 Long PLCP SERVICE field

Four bits have been defined in the SERVICE field to support the Extended Rate extension for the CCK-OFDM standard.

In Table **, the leftmost bit (bit 0) shall be used to indicate whether the PSDU modulation is ER/OFDM. When set to 1, this indicates that the modulation is OFDM.

Bit 2 shall be used to indicate that the transmit frequency and symbol clocks are derived from the same oscillator. For ER/OFDM, this bit must always be set since locked timing and carrier clocks are mandatory.

Bit 3 shall be used to indicate whether the modulation method is CCK <0> or PBCC <1> as described in IEEE Std 802.11b, 1999 Edition. For ER/OFDM this bit shall be ignored.
The SERVICE field shall be transmitted b0 first in time, and shall be protected by the CCITT CRC-16 frame check sequence described in 19.2.3.6.

An IEEE 802.11-compliant device shall set the values of the bits b4 to 0. For the extended rate OFDM operation, the length extension bits are not used and shall be set to 0.

Table **—SERVICE field definitions

b0	B1	b2	b3	b4	b5	b6	b7
Modulation selection 0 = non OFDM 1 = OFDM	**Reserved**	**Locked Clock Bit 0 = not locked 1 = locked**	**Modulation Selection 0 = CCK 1 = PBCC**	**Reserved**	**Length Extension Bit (PBCC)**	**Length Extension Bit (PBCC)**	**Length Extension Bit**

19.2.3.5 Long PLCP LENGTH field

The PLCP length field shall be an unsigned 16-bit integer that indicates the number of microseconds required to transmit the PSDU. The transmitted value shall be determined from the LENGTH and DataRate parameters in the TXVECTOR issued with the PHY-TXSTART.request primitive described in 19.4.4.2.

The length field provided in the TXVECTOR is in octets and is converted to microseconds for inclusion in the PLCP LENGTH field. The LENGTH field is calculated using the following

LENGTH = PreambleLengthOFDM + PLCPSignalOFDM + 4 x Ceiling((PLCPServiceBits + 8 x (number-of-octets) + PadBits) / N_{DBPS}) + SignalExtension

where

PreambleLengthOFDM is 8microseconds;
PLCPSignalOFDM is 4 microseconds;

ceiling is a function that returns the smallest integer value greater than or equal to its argument value;

PLCPServiceBits is 16 bits;

number-of-octets is the number of data octets in the PSDU;

PadBits is 6 bits;

N_{DBPS} is the number of data bits per OFDM symbol.

SignalExtension is 6 microseconds;

The length field is defined in units of microseconds and must correspond to the actual length of the packet. {Note to the editor: This includes all the OFDM overhead and SIFs pad.}

The least significant bit (lsb) shall be transmitted first in time. This field shall be protected by the CCITT CRC-16 frame check sequence described in 19.2.3.6.

19.2.3.6 PLCP CRC (CCITT CRC-16) field

The SIGNAL, SERVICE, and LENGTH fields shall be protected with a CCITT CRC-16 frame check sequence (FCS). The CCITT CRC-16 FCS shall be the one's complement of the remainder generated by the modulo 2 division of the protected PLCP fields by the polynomial

$$x^{16} + x^{12} + x^5 + 1$$

The protected bits shall be processed in transmit order. All FCS calculations shall be made prior to data scrambling. A schematic of the processing is shown in Figure ***.

As an example, the SIGNAL, SERVICE, and LENGTH fields for a DBPSK signal with a PPDU length of 192 μs (24 octets) would be given by the following:

0101 0000 0000 0000 0000 0011 0000 0000 [leftmost bit (b0) transmitted first in time]
b0.....b48

The one's complement FCS for these protected PLCP preamble bits would be the following:

0101 1011 0101 0111 [leftmost bit (b0) transmitted first in time]
b0.....b16

Figure *** depicts this example.

TRANSMIT AND RECEIVE PLCP HEADER
CCIT CRC-16 CALCULATOR

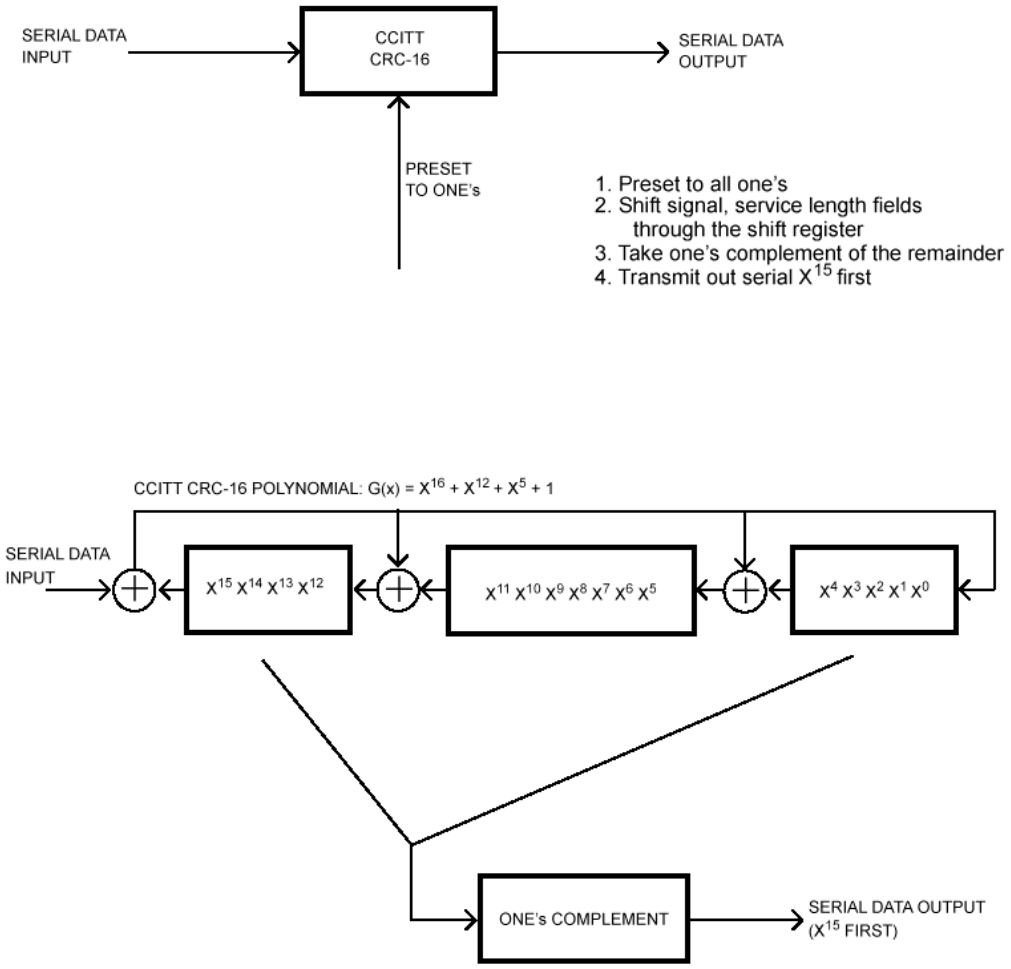

Figure *—CCITT CRC-16 implementation**

An illustrative example of the CCITT CRC-16 FCS using the information from Figure *** is shown in Figure ***.

Data	CRC Registers msb lsb	
	1111111111111111	; Initialize preset to one's
0	1110111111011111	
1	1101111110111110	
0	1010111101011101	
1	0101111010111010	
0	1011110101110100	
0	0110101011001001	
0	1101010110010010	
0	1011101100000101	
0	0110011000101011	
0	1100110001010110	
0	1000100010001101	
0	0000000100111011	
0	0000001001110110	
0	0000010011101100	
0	0000100111011000	
0	0001001110110000	
0	0010011101100000	
0	0100111011000000	
0	1001110110000000	
0	0010101100100001	
0	0101011001000010	
0	1010110010000100	
1	0101100100001000	
1	1010001000110001	
0	0101010001000011	
0	1010100010000110	
0	0100000100101101	
0	1000001001011010	
0	0001010010010101	
0	0010100100101010	
0	0101001001010100	
0	1010010010101000	

Figure *—Example of CRC calculation**

19.2.3.7 Long PLCP data modulation and modulation rate change

The long PLCP preamble and header shall be transmitted using the 1 Mbit/s DBPSK modulation. The SIGNAL and SERVICE fields combined shall indicate the modulation and data rate that shall be used to transmit the PSDU. The transmitter and receiver shall initiate the PSDU modulation and rate indicated by the SIGNAL and SERVICE fields, starting immediately after the last symbol of the PLCP Header. The PSDU transmission rate shall be set by the DATARATE parameter in the TXVECTOR, issued with the PHY-TXSTART.request primitive described in 19.4.4.2.

19.2.3.8 Short PLCP synchronization (shortSYNC)

The shortSYNC field shall consist of 56 bits of scrambled "0" bits. This field is provided so the receiver can perform the necessary synchronization operations. The initial state of the scrambler (seed) shall be [001 1011], where the left end bit specifies the value to place in the first delay element (Z^1) in Figure ***, and the right end bit specifies the value to place in the last delay element (Z^7).

19.2.3.9 Short PLCP SFD field (shortSFD)

The shortSFD shall be a 16-bit field and be the time reverse of the field of the SFD in the long PLCP preamble (19.2.3.2). The field is the bit pattern 0000 0101 1100 1111. The right end bit shall be transmitted first in time. A receiver not configured to use the short header option will not detect this SFD.

19.2.3.10 Short PLCP SIGNAL field (shortSIGNAL)

The 8-bit SIGNAL field of the short header indicates to the PHY the data rate that shall be used for transmission (and reception) of the PSDU. A PHY operating with the ER/OFDM/short option supports mandatory rates given by the following 8-bit words, where the lsb shall be transmitted first in time and the number represents the rate in units of 100 kBit/s:

a) X’14’ (msb to lsb) for 2 Mbit/s;

b) X’37’ (msb to lsb) for 5.5 Mbit/s;

c) X’6E’ (msb to lsb) for 11 Mbit/s;

d) X’14’ (msb to lsb) for all ER/OFDM modes

19.2.3.11 Short PLCP SERVICE field (shortSERVICE)

The SERVICE field in the short header shall be the same as the SERVICE field described in 19.2.3.4.

19.2.3.12 Short PLCP LENGTH field (shortLENGTH)

The LENGTH field in the short header shall be the same as the LENGTH field described in 19.2.3.5

19.2.3.13 Short CCITT CRC-16 field (shortCRC)

The CRC in the short header shall be the same as the CRC field defined in 19.2.3.6. The CRC-16 is calculated over the shortSIGNAL, shortSERVICE, and shortLENGTH fields.

19.2.3.14 Short PLCP data modulation and modulation rate change

The short PLCP preamble shall be transmitted using the 1 Mbit/s DBPSK modulation. The short PLCP header shall be transmitted using the 2 Mbit/s modulation. The SIGNAL and SERVICE fields combined shall indicate the modulation and data rate that shall be used to transmit the PSDU. The transmitter and receiver shall initiate the PSDU modulation and rate indicated by the SIGNAL and SERVICE fields, starting immediately after the last symbol of the PLCP Header. The PSDU transmission rate shall be set by the DATARATE parameter in the TXVECTOR, issued with the PHY-TXSTART.request primitive described in 19.4.4.2.

19.2.4 PLCP/Extended Rate PHY data scrambler and descrambler

The polynomial $G(z) = z^{-7} + z^{-4} + 1$ shall be used to scramble all bits transmitted. The feedthrough configuration of the scrambler and descrambler is self-synchronizing, which requires no prior knowledge of the transmitter initialization of the scrambler for receive processing. Figure *** and Figure *** show typical implementations of the data scrambler and descrambler, but other implementations are possible.

The scrambler shall be initialized as specified in 19.2.3.8 for the short PLCP and 19.2.3.1 for the long PLCP. For a Long Preamble, this shall result in the scrambler registers Z_1 through Z_7 in Figure *** having the data pattern [1101100] (i.e., $Z_1 = 1 ... Z_7 = 0$) when the scrambler is first started. The scrambler shall be initialized with the reverse pattern [0011011] when transmitting the optional Short Preamble.

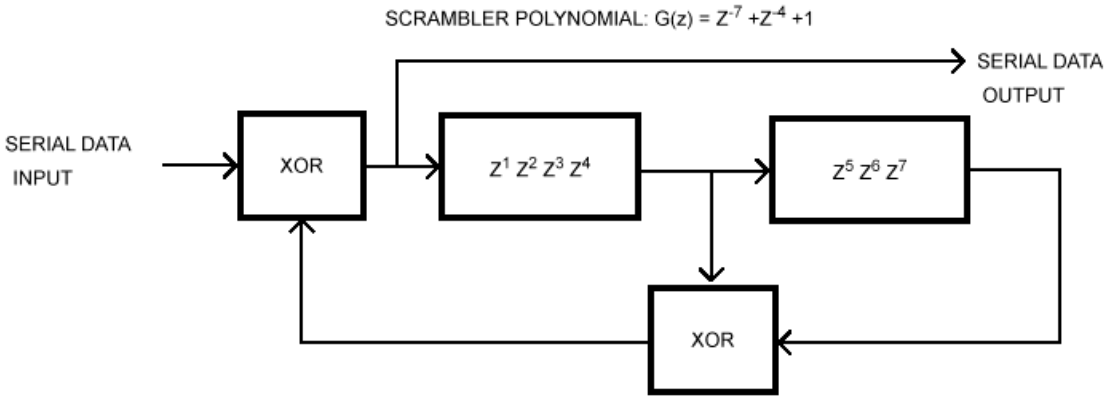

Figure *—Data scrambler**

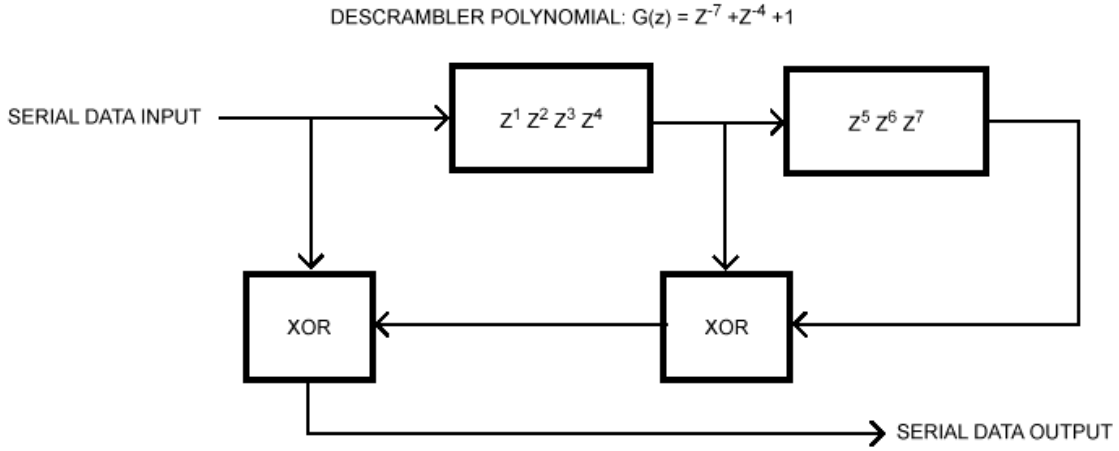

Figure *—Data descrambler**

19.2.6 PLCP transmit procedure

The transmit procedures for an Extended Rate PHY using the long PLCP preamble and header are the same as those described in IEEE Std 802.11 and IEEE Std 802.11b, 1999 Edition (15.2.6 and 18.2.6), and do not change apart from the ability to transmit the Extended Rates.

The procedures for a transmitter employing ER/OFDM/short are the same except for length and rate changes. The decision to use a long or short PLCP is beyond the scope of this standard.

19.2.7 PLCP receive procedure

The receive procedures configured to receive the mandatory and optional PLCPs, rates, and modulations are described in this subclause. A receiver that supports this Extended Rate extension of the standard is capable of receiving all rates specified in IEEE Std 802.11, 1999 Edition, and all mandatory rates in IEEE Std 802.11b, 1999 Edition. If the PHY implements the Short Preamble option, it shall detect both short and Long Preamble formats and indicate which type of preamble was received in the RXVECTOR.

The receiver shall implement the CCA procedure as defined in 19.4.8.4. Upon receiving a PPDU, the receiver shall distinguish between a long and short header format by the value of the SFD, as specified in 19.2.2. The receiver shall demodulate a long PLCP header using BPSK at 1 Mbit/s. The receiver shall demodulate a short PLCP header

using QPSK at 2 Mbit/s. The receiver shall use the SIGNAL and SERVICE fields of the PLCP header to determine the data rate and modulation of the PSDU.

The receive procedures for an Extended Rate PHY using the long PLCP preamble and header are the same as those described in IEEE Std 802.11 and IEEE Std 802.11b, 1999 Edition (15.2.7and 18.2.7), and do not change apart from the ability to receive the Extended Rates.

The procedures for a transmitter employing ER/OFDM/short are the same except for length and rate changes. The decision to use a long or short PLCP is beyond the scope of this standard.

19.3 Extended Rate PLME

19.3.1 PLME_SAP sublayer management primitives

Table *** lists the MIB attributes that may be accessed by the PHY sublayer entities and intralayer or higher layer management entities (LMEs). These attributes are accessed via the PLME-GET, PLME-SET, and PLME-RESET primitives defined in Clause 10 of IEEE Std 802.11, 1999 Edition.

19.3.2 Extended Rate PHY MIB

All Extended Rate PHY MIB attributes are defined in Annex D of IEEE Std 802.11, 1999 Edition, with specific values defined in Table ***.

Table *—MIB attribute default values/ranges**

Managed object	**Default value/range**	**Operational semantics**
dot11PhyOperationTable		
dot11PHYType	Extended Rate–2.4 (X'TBR')	Static
dot11TempType	Implementation dependent	Static
dot11CurrentRegDomain	Implementation dependent	Static
dot11ShortPreambleOptionImplemented	Implementation dependent	Static
dot11PBCCOption	Implemented Implementation dependent	Static
dot11ChannelAgility Present	Implementation dependent	Static
dot11ChannelAgilityEnabled	False/Boolean	Dynamic
dot11PhyAntennaTable		
dot11CurrentTxAntenna	Implementation dependent	Dynamic
dot11DiversitySupport	Implementation dependent	Static
dot11CurrentRxAntenna	Implementation dependent	Dynamic
dot11PhyTxPowerTable		
dot11NumberSupportedPowerLevels	Implementation dependent	Static
dot11TxPowerLevel1	Implementation dependent	Static
dot11TxPowerLevel2	Implementation dependent	Static
dot11TxPowerLevel3	Implementation dependent	Static
dot11TxPowerLevel4	Implementation dependent	Static
dot11TxPowerLevel5	Implementation dependent	Static
dot11TxPowerLevel6	Implementation dependent	Static
dot11TxPowerLevel7	Implementation dependent	Static
dot11TxPowerLevel8	Implementation dependent	Static
dot11CurrentTxPowerLevel	Implementation dependent	Dynamic
dot11PhyDSSSTable		
dot11CurrentChannel	Implementation dependent	Dynamic
dot11CCAModeSupported	Implementation dependent	Static
dot11CurrentCCAMode	Implementation dependent	Dynamic
dot11EDThreshold	Implementation dependent	Dynamic
dot11AntennasListTable		

dot11SupportTxAntenna	Implementation dependent	Static
dot11SupportRxAntenna	Implementation dependent	Static
dot11DiversitySelectionRx	Implementation dependent	Dynamic
dot11RegDomainsSupportedTable		
dot11RegDomainsSupported	Implementation dependent	Static
dot11SupportedDataRatesTx	Table Tx X'02', X'04', X'0B', X'16', TBR	Static
dot11SupportedDataRatesRx	Table Rx X'02', X'04', 'X'0B', X'16', TBR	Static
NOTE—The column titled "Operational semantics" contains two types: static and dynamic. Static MIB attributes are fixed and cannot be modified for a given PHY implementation. Dynamic MIB attributes can be modified by some management entities.		

19.3.3 DS PHY characteristics

The static DS PHY characteristics, provided through the PLME-CHARACTERISTICS service primitive, are shown in Table 101. The definitions of these characteristics are in 10.4.3 of IEEE Std 802.11, 1999 Edition.

19.3.4 Extended Rate TXTIME calculation

The value of the TXTIME parameter returned by the PLME-TXTIME.confirm primitive shall be calculated according to the following equation:

TXTIME = PreambleLengthCCK + PLCPHeaderTimeCCK + PreambleLengthOFDM + PLCPSignalOFDM + 4 x Ceiling((PLCPServiceBits + 8 x (number-of-octets) + PadBits) / N_{DBPS}) + SignalExtension

where

The value of PreambleLengthCCK is 144 µs if the TXPREAMBLE_TYPE value from the TXVECTOR parameter indicates "LONGPREAMBLE," or 72 µs if the TXPREAMBLE_TYPE value from the TXVECTOR parameter indicates "SHORTPREAMBLE";

The value of PLCPHeaderTimeCCK is 48 µs if the TXPREAMBLE_TYPE value from the TXVEC-TOR parameter indicates "LONGPREAMBLE," or 24 µs if the TXPREAMBLE_TYPE value from the TXVECTOR parameter indicates "SHORTPREAMBLE";

Ceiling is a function that returns the smallest integer value greater than or equal to its argument value;

PreambleLengthOFDM is 8 microseconds;

PLCPSignalOFDM is 4 microseconds;

PLCPServiceBits is 16 bits;

number-of-octets is the number of data octects in the PSDU;

PadBits is 6 bits;

SignalExtension is 6 us;

N_{DBPS} is the number of data bits per OFDM symbol.

Table *—Extended Rate PHY characteristics**

Characteristic	Value
aSlotTime	20 µs

aSIFSTime	10 µs
aCCATime	<15 µs
aRxTxTurnaroundTime	<5 µs
aTxPLCPDelay	Implementors may choose any value for this delay as long as the requirements of aRxTxTurnaroundTime are met.
aRxPLCPDelay	Implementors may choose any value for this delay as long as the requirements of aSIFSTime and aCCATime are met.
aRxTxSwitchTime	<5 µs
aTxRampOnTime	Implementors may choose any value for this delay as long as the requirements of aRxTxTurnaroundTime are met.
aTxRampOffTime	Implementors may choose any value for this delay as long as the requirements of aSIFSTime are met.
aTxRFDelay	Implementors may choose any value for this delay as long as the requirements of aRxTxTurnaroundTime are met.
aRxRFDelay	Implementors may choose any value for this delay as long as the requirements of aSIFSTime and aCCATime are met.
aAirPropagationTime	1 µs
aMACProcessingDelay	0 (not applicable)
aPreambleLength	144 µs
aPLCPHeaderLength	48 bits
aMPUMaxLength	$14 < x < (2^{12} - 1)$
ACWmin	31
aCWmax	1023

19.3.5 Vector descriptions

Several service primitives include a parameter vector. These vectors are a list of parameters as described in Table ***. DATARATE and LENGTH are described in 12.3.4.4 of IEEE Std 802.11, 1999 Edition. The remaining parameters are considered to be management parameters and are specific to this PHY.

Table *—Parameter vectors**

Parameter Associated vector Value		
DATARATE	RXVECTOR, TXVECTOR	The rate used to transmit the PSDU in Mbit/s.
LENGTH	RXVECTOR, TXVECTOR	The length of the PSDU in octets.
PREAMBLE_TYPE	RXVECTOR, TXVECTOR	The preamble used for the transmission of this PPDU. This is an enumerated type that can take the value SHORTPREAMBLE or LONGPRE-AMBLE.
MODULATION	RXVECTOR, TXVECTOR	The modulation used for the trans-mission of this PSDU. TBR for OFDM.

19.4 Extended Rate PMD sublayer

19.4.1 Scope and field of application

Subclause 19.4 describes the PMD services provided to the PLCP for the Extended Rate PHY. Also defined in this subclause are the functional, electrical, and RF characteristics required for interoperability of implementations

conforming to this specification. The relationship of this specification to the entire Extended Rate PHY is shown in Figure ***.

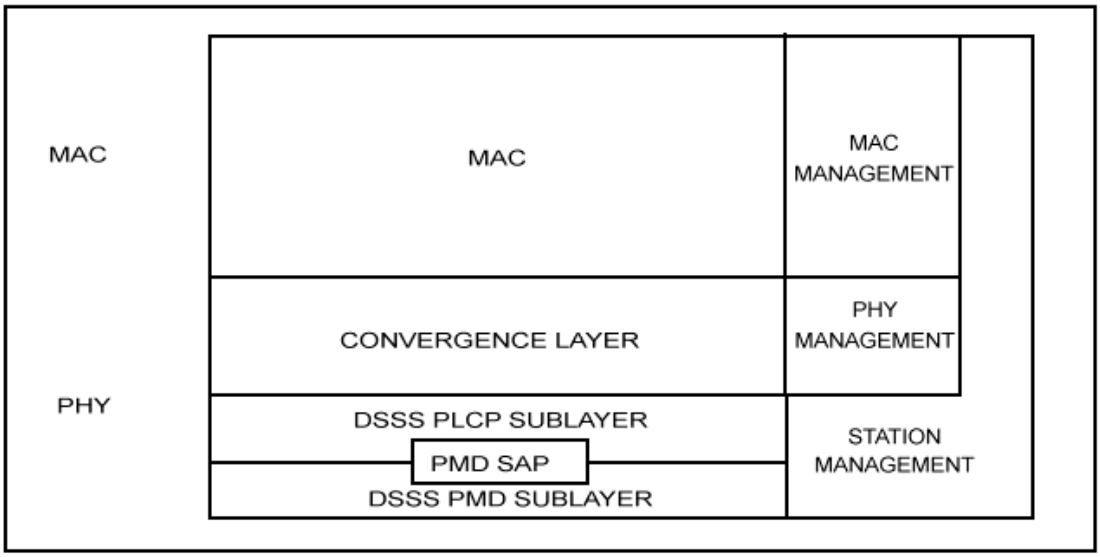

Figure *—Layer reference model.**

19.4.2 Overview of service

The Extended Rate PMD sublayer accepts PLCP sublayer service primitives and provides the actual means by which data is transmitted or received from the medium. The combined functions of the Extended Rate PMD sublayer primitives and parameters for the receive function result in a data stream, timing information, and associated received signal parameters being delivered to the PLCP sublayer. A similar functionality is provided for data transmission.

19.4.3 Overview of interactions

The primitives associated with the PLCP sublayer to the Extended Rate PMD fall into two basic categories

a) Service primitives that support PLCP peer-to-peer interactions;

b) Service primitives that have local significance and that support sublayer-to-sublayer interactions.

19.4.4 Basic service and options

All of the service primitives described in this subclause are considered mandatory, unless otherwise specified.

19.4.4.1 PMD_SAP peer-to-peer service primitives

Table *** indicates the primitives for peer-to-peer interactions.

Table *—PMD_SAP peer-to-peer service primitives**

Primitive	Request	Indicate	Confirm	Response
PMD_DATA	X	X	—	—

19.4.4.2 PMD_SAP sublayer-to-sublayer service primitives

Table *** indicates the primitives for sublayer-to-sublayer interactions.

Table *—PMD_SAP sublayer-to-sublayer service primitives**

Primitive	Request	Indicate	Confirm	Response
PMD_TXSTART	X	—	—	—
PMD_TXEND	X	—	—	—
PMD_ANTSEL	X	X	—	—
PMD_TXPWRLVL	X	—	—	—
PMD_MODULATION	X	X	—	—
PMD_PREAMBLE	X	X	—	—
PMD_RATE	X	X	—	—
PMD_RSSI	—	X	—	—
PMD_SQ	—	X	—	—
PMD_CS	—	X	—	—
PMD_ED	X	X	—	—

19.4.5 PMD_SAP detailed service specification

[Editor's Note: This section should look substantially like the corresponding section 18.4.5 in the High Rate standard with appropriate modifications for the addition of the Extended Rate primitives.]

19.4.6 PMD operating specifications, general

The following subclauses provide general specifications for the OFDM PMD sublayer. These specifications apply to both the Receive and Transmit functions and general operation of a OFDM PHY.

19.4.6.1 Operating frequency range

The Extended Rate PHY shall operate in the 2.4–2.4835 GHz frequency range, as allocated by regulatory bodies in the USA and Europe, or in the 2.471–2.497 GHz frequency range, as allocated by regulatory authority in Japan.

19.4.6.2 Number of operating channels

The channel center frequencies and CHNL_ID numbers shall be as shown in Table 105. The FCC (US), IC (Canada), and ETSI (Europe) specify operation from 2.4–2.4835 GHz. For Japan, operation is specified as 2.471–2.497 GHz. France allows operation from 2.4465–2.4835 GHz, and Spain allows operation from 2.445–2.475 GHz.

For each supported regulatory domain, all channels in Table *** marked with an "X" shall be supported.

Table *—Extended Rate PHY frequency channel plan**

		Regulatory domains					
CHNL_ID	Frequency (MHz)	X'10' FCC	X'20' IC	X'30' ETSI	X'31' Spain	X'32' France	X'40' MKK
1	2412	X	X	X	—	—	—
2	2417	X	X	X	—	—	—
3	2422	X	X	X	—	—	—
4	2427	X	X	X	—	—	—
5	2432	X	X	X	—	—	—
6	2437	X	X	X	—	—	—
7	2442	X	X	X	—	—	—
8	2447	X	X	X	—	—	—
9	2452	X	X	X	—	—	—
10	2457	X	X	X	X	X	—

11	2462	X	X	X	X	X	—
12	2467	—	—	X	—	X	—
13	2472	—	—	X	—	X	—
14	2484	—	—	—	—	—	X

In a multiple cell network topology, overlapping and/or adjacent cells using different channels can operate simultaneously without interference if the distance between the center frequencies is at least 25 MHz.

Channel 14 shall be designated specifically for operation in Japan.

19.4.6.3 Modulation and channel data rates

Twelve modulation formats and data rates are specified for the Extended Rate PHY. The basic access rate shall be based on 1 Mbit/s DBPSK modulation. The enhanced access rate shall be based on 2 Mbit/s DQPSK. The High Rate specification defines two additional data rates based on the CCK modulation scheme for 5.5 Mbit/s and 11 Mbit/s. The Extended Rate specification defines three additional mandatory data rates based on the OFDM modulation scheme. These mandatory data rates are6 Mbit/s, 12 Mbit/s, and 24 Mbit/s. The Extended Rate specification also defines five optional data rates, 9 Mbit/s, 18 Mbit/s, 36 Mbit/s, 48 Mbit/s, and 54 Mbit/s.

19.4.6.4 Spreading sequence and modulation for 1 and 2 Mbit/s

The following 11-chip Barker sequence shall be used as the PN code sequence for the 1 and 2 Mbit/s modulation:

+1, –1, +1, +1, –1, +1, +1, +1, –1, –1, –1

The leftmost chip shall be output first in time. The first chip shall be aligned at the start of a transmitted symbol. The symbol duration shall be exactly 11 chips long.

The DBPSK encoder for the basic access rate is specified in Table ***. The DQPSK encoder is specified in Table ***. (In these tables, +j" shall be defined as counterclockwise rotation.)

Table *—1 Mbits/s DBPSK encoding table**

Bit input	Phase change (+jw)
0	0
1	Pi

Table *—2 Mbits/s DQPSK encoding table**

Dibit pattern (d0, d1) (d0 is first in time)	Phase change (+jw)
00	0
01	Pi/2
11	Pi
10	3Pi/2(-Pi/2)

19.4.6.5 Formatting and OFDM modulation of the PSDU for 6, 9, 12, 24, 36,48, and 54 Mbps

The PSDU for the ER/OFDM system consists of four parts:

OfdmSync – provides for synchronization and channel estimation,

b.) OFDM Signal Field – provides rate and length information for the OFDM processc.) OFDM Symbols – the data carrying part of the PSDU,
d.) Signal Extension – an extension of the signal to account for implementation dependant latency incurred as a result of convolutional decoding and deinterleaving.

The following subclauses define these parts of the PSDU.

Furthermore, all three parts of the PSDU shall be transmitted with the same average power as the PLCP Preamble and PLCP Header.

19.4.6.5.1 OfdmSync

The OfdmSync field is used for synchronization. It consists of two long symbolsand a guard interval twice the length of the OFDM cyclic extension that are described in this subclause.

A long OFDM training symbol consists of 53 subcarriers (including a zero value at dc), which are modulated by the elements of the sequence L, given by

$L_{-26,\,26}$ = {1, 1, –1, –1, 1, 1, –1, 1, –1, 1, 1, 1, 1, 1, 1, –1, –1, 1, 1, –1, 1, –1, 1, 1, 1, 1, 0,

1, –1, –1, 1, 1, –1, 1, –1, 1, –1, –1, –1, –1, –1, 1, 1, –1, –1, 1, –1, 1, –1, 1, 1, 1, 1}

A long OFDM training symbol shall be generated according to the following equation:

$$r_{LONG}(t) = w_{TLONG}(t) \sum_{k=-N_{ST}/2}^{N_{ST}/2} L_k \exp(j2\pi k\Delta_F(t - T_{G12}))$$

where

T_{G12} = 1.6 µs. Two periods of the long sequence are transmitted for improved channel estimation accuracy, yielding T_{LONG} = 1.6 + 2 × 3.2 = 8 µs.

19.4.6.5.2 Signal Field(SIGNAL)

The OFDM training symbols shall be followed by the SIGNAL field, which contains the RATE and the LENGTH fields of the TXVECTOR. The RATE field conveys information about the type of modulation and the coding rate as used in the rest of the packet. The encoding of the SIGNAL single OFDM symbol shall be performed with BPSK modulation of the subcarriers and using convolutional coding at R = 1/2. The encoding procedure, which includes convolutional encoding, interleaving, modulation mapping processes, pilot insertion, and OFDM modulation, follows the steps described in 17.3.5.5, 17.3.5.6, and 17.3.5.8, as used for transmission of data at a 6 Mbit/s rate. The contents of the SIGNAL field are not scrambled. The SIGNAL field shall be composed of 24 bits, as illustrated in Figure 111. The four bits 0 to 3 shall encode the RATE. Bit 4 shall be reserved for future use. Bits 5–16 shall encode,the data portion of the packet in octets without the SIFs extension. The least significant bit (LSB) is transmitted first.

RATE (4 bits)					LENGTH (12 bits)													SIGNAL TAIL (6 bits)					
R1	R2	R3	R4	R	LSB											MSB	P	"0"	"0"	"0"	"0"	"0"	"0"
0	1	2	3	4	5	6	7	8	9	10	11	12	13	14	15	16	17	18	19	20	21	22	23

Transmit Order →

The process of generating the SIGNAL OFDM symbol is illustrated in Annex G (G.4).

19.4.6.5.2.1 Data rate (RATE)

The bits R1–R4 shall be set, dependent on RATE, according to the values in Table 80.

Rate (Mbits/s)	R1–R4
6	1101
9	1111
12	0101
18	0111
24	1001
36	1011
48	0001
54	0011

Table XXX. Data Rate Bit Field Definition

19.4.6.5.2.2 PLCP length field (LENGTH)

The PLCP length field shall be an unsigned 12-bit integer that indicates the number of octets in the PSDU that the MAC is currently requesting the PHY to transmit. This value is used by the PHY to determine the number of octet transfers that will occur between the MAC and the PHY after receiving a request to start transmission. The transmitted value shall be determined from the LENGTH parameter in the TXVECTOR issued with the PHY-TXSTART.request primitive described in 12.3.5.4 (IEEE Std 802.11, 1999 Edition). The LSB shall be transmitted first in time. This field shall be encoded by the convolutional encoder described in 17.3.5.5.

19.4.6.5.2.3 Parity (P), Reserved (R), and Signal tail (SIGNAL TAIL)

Bit 4 shall be reserved for future use. Bit 17 shall be a positive parity (even parity) bit for bits 0–16. The bits 18–23 constitute the SIGNAL TAIL field, and all 6 bits shall be set to zero.

19.4.6.5.3 Overview of the OFDM symbol encoding process

The encoding process is composed of many detailed steps, which are described fully in later subclauses, as noted below. The following overview intends to facilitate understanding the details described in these subclauses:

a) Calculate from RATE field of the TXVECTOR the number of data bits per OFDM symbol (N_{DBPS}), the coding rate (R), the number of bits in each OFDM subcarrier (N_{BPSC}), and the number of coded bits per OFDM symbol (N_{CBPS}).

d) Extend the data bit string with “zero” bits (at least 6 bits) so that the resulting length will be a multiple of the number of data bits per OFDM symbol (N_{DBPS}).

e) Initiate the scrambler with the state last observed while processing the PLCP Header, generate a sequence of scrambled data bits.

f) Replace the six scrambled “zero” bits following the “data” with six nonscrambled “zero” bits. (Those bits return the convolutional encoder to the “zero state” and are denoted as “tail bits.”)

g) Encode the extended, scrambled data string with a convolutional encoder (R = 1/2). Omit (puncture) some of the encoder output string (chosen according to “puncturing pattern”) to reach the desired “coding rate.”

h) Divide the encoded bit string into groups of N_{CBPS} bits. Within each group, perform an “interleaving” (reordering) of the bits according to a rule corresponding to the desired RATE.

i) Divide the resulting coded and interleaved data string into groups of N_{CBPS} bits. For each of the bit groups, convert the bit group into a complex number according to the modulation encoding tables.

j) Divide the complex number string into groups of 48 complex numbers. Each such group will be associated with one OFDM symbol. In each group, the complex numbers will be numbered 0 to 47 and mapped hereafter into OFDM subcarriers numbered –26 to –22, –20 to –8, –6 to –1, 1 to 6, 8 to 20, and 22 to 26. The subcarriers –21, –7, 7, and 21 are skipped and, subsequently, used for inserting pilot subcarriers. The “0” subcarrier, associated with center frequency, is omitted and filled with zero value.

k) Four subcarriers are inserted as pilots into positions –21, –7, 7, and 21. The total number of the sub-carriers is 52 (48 + 4).

l) For each group of subcarriers –26 to 26, convert the subcarriers to time domain using inverse Fourier transform. Prepend to the Fourier-transformed waveform a circular extension of itself thus forming a guard interval (GI), and truncate the resulting periodic waveform to a single OFDM symbol length by applying time domain windowing.

19.4.6.5.3.1 RATE-dependent parameters

The modulation parameters dependent on the data rate used shall be set according to Table ***.

Table*—Rate-dependent parameters**

Data rate (Mbits/s)	Modulation	Coding rate (R)	Coded bits per subcarrier (N_{BPSC})	Coded bits per OFDM symbol (N_{CBPS})	Data bits per OFDM symbol (N_{DBPS})
6	BPSK	1/2	1	48	24
9	BPSK	3/4	1	48	36
12	QPSK	1/2	2	96	48
18	QPSK	3/4	2	96	72
24	16-QAM	1/2	4	192	96
36	16-QAM	3/4	4	192	144
48	64-QAM	2/3	6	288	192
54	64-QAM	3/4	6	288	216

19.4.6.5.3.2 Timing related parameters

Table *** is the list of timing parameters associated with the OFDM PLCP.

Table *—Timing-related parameters**

Parameter	Value

N_{SD} : Number of data subcarriers	48
N_{SP} : Number of pilot subcarriers	4
N_{ST} : Number of subcarriers, total	52 ($N_{SD} + N_{SP}$)
: Subcarrier frequency spacing	0.3125 MHz (=20 MHz/64)
T_{FFT} : IFFT/FFT period	3.2 µs (1/!F)
$T_{OFDMSYNC}$: OfdmSync duration	12 µs ($T_{SHORT} + T_{LONG}$)
T_{GI} : GI duration	0.8 µs (T_{FFT} /4)
T_{GI2} : Training symbol GI duration	1.6 µs (T_{FFT} /2)
T_{SYM} : Symbol interval	4 µs ($T_{GI} + T_{FFT}$)
T_{SHORT} : Short training sequence duration	4 µs (5× T_{FFT} /4)
T_{LONG} : Long training sequence duration	8 µs (T_{GI2} + 2 × T_{FFT})

19.4.6.5.3.3 Mathematical conventions in the signal descriptions

The transmitted signals will be described in a complex baseband signal notation. The actual transmitted signal is related to the complex baseband signal by the following relation:

$$r_{(RF)}(t) = Re\{r(t)\exp(j2\pi f_c t)\}$$

where

Re(.) represents the real part of a complex variable;

f_c denotes the carrier center frequency.

The transmitted baseband signal is composed of contributions from several OFDM symbols.

All the symbols of the signal are constructed as an inverse Fourier transform of a set of coefficients, C_k, with C_k defined later as data or pilots.

$$r_{SYMBOL}(t) = w_{SYMBOL}(t) \sum_{k=-N_{ST}/2}^{N_{ST}/2} C_k \exp(j2\pi k\Delta_f)(t - T_{GUARD})$$

The parameters Δ_f and N_{ST} are described in Table ***. The resulting waveform is periodic with a period of $T_{FFT} = 1/\Delta_f$. Shifting the time by T_{GUARD} creates the “circular prefix” used in OFDM to avoid ISI from the previous frame. Three kinds of T_{GUARD} are defined: for the short training sequence (= 0 µs), for the long training sequence (= T_{GI2}), and for data OFDM symbols (= T_{GI}). The boundaries of the symbol are set by a multiplication by a time-windowing function, $w_{TSUBFRAME}(t)$, which is defined as a rectangular pulse, $w_T(t)$, of duration *T*, accepting the value $T_{SUBFRAME}$. The time-windowing function, $w_T(t)$, depending on the value of the duration parameter, *T*, may extend over more than one period, T_{FFT}. In particular, window functions that extend over multiple periods of the Fast Fourier Transform (FFT) are utilized in the definition of the preamble. Figure *** illustrates the possibility of extending the windowing function over more than one period, T_{FFT}, and additionally shows smoothed transitions by application of a windowing function. In particular, window functions that extend over multiple periods of the FFT are utilized in the definition of the preamble.

$$w_T(t) = \begin{cases} \sin^2\left(\frac{\pi}{2}(0.5 + t/T_{TR})\right) & (-T_{TR}/2 < t < T_{TR}/2) \\ 1 & (T_{TR}/2 \le t < T - T_{TR}/2) \\ \sin^2\left(\frac{\pi}{2}(0.5 - (t-T)/T_{TR})\right) & (T - T_{TR}/2 \le t < T + T_{TR}/2) \end{cases}$$

In the case of vanishing T_{TR}, the windowing function degenerates into a rectangular pulse of duration T. The normative specifications of generating the transmitted waveforms shall utilize the rectangular pulse shape. In implementation, higher T_{TR} is typically implemented in order to smooth the transitions between the consecutive subsections. This creates a small overlap between them, of duration T_{TR}, as shown in Figure ***. The transition time, T_{TR}, is about 100 ns. Smoothing the transition may be required in order to reduce the spectral side-lobes of the transmitted waveform. However, the binding requirements are the spectral mask and modulation
accuracy requirements, as detailed in ***. Time domain windowing, as described here, is
just one way to achieve those objectives. The implementer may use other methods to achieve the same goal, such as frequency domain filtering. Therefore, the transition shape and duration of the transition are informative parameters.

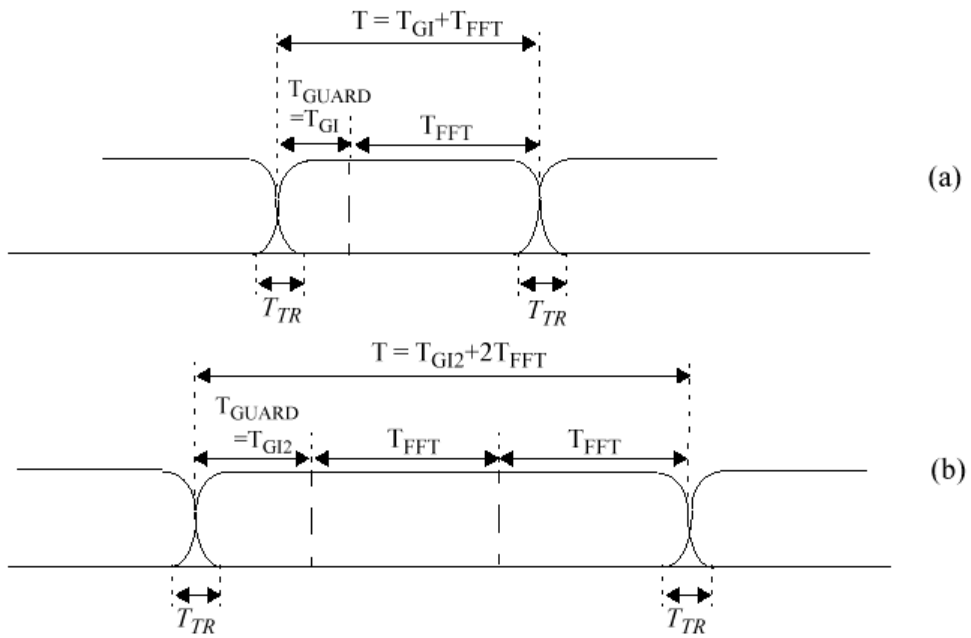

Figure *—Illustration of OFDM frame with cyclic extension and windowing for (a) single reception or (b) two receptions of the FFT period**

19.4.6.6 Structure of the OFDM Symbol field

The following sub-clauses describe the modulation structure of the PSDU.

19.4.6.6.1 OFDM Data Symbol field

The OFDM Data Symbol field contains the PSDU data, TAIL bits, and PAD bits, if needed, as described in 19.4.6.6.2 and 19.4.6.6.3. All bits in the OFDM Symbols field are scrambled, as described in 17.3.5.4.

19.4.6.6.2 PSDU tail bits

The tail bit field shall be six bits of “0,” which are required to return the convolutional encoder to the “zero state.” This procedure improves the error probability of the convolutional decoder, which relies on future bits when decoding and which may be not be available past the end of the message. The tail bit field shall be produced by replacing six scrambled “zero” bits following the message end with six non-scrambled “zero” bits.

19.4.6.6.3 PSDU pad bits

The number of bits in the OFDM Symbol field shall be a multiple of N_{CBPS}, the number of coded bits in an OFDM symbol (48, 96, 192, or 288 bits). To achieve that, the length of the message is extended so that it becomes a multiple of N_{DBPS}, the number of data bits per OFDM symbol. At least 6 bits are appended to the message, in order to accommodate the TAIL bits, as described in 19.4.6.6.2. The number of OFDM symbols, N_{SYM}; the number of bits in the DATA field, N_{DATA}; and the number of pad bits, N_{PAD}, are computed from the length of the PSDU (LENGTH) as follows:

N_{SYM} = Ceiling ((16 + 8 × LENGTH + 6)/N_{DBPS})

$N_{DATA} = N_{SYM} \times N_{DBPS}$

$N_{PAD} = N_{DATA} - (16 + 8 \times \text{LENGTH} + 6)$

The function ceiling (.) is a function that returns the smallest integer value greater than or equal to its argument value. The appended bits ("pad bits") are set to "zeros" and are subsequently scrambled with the rest of the bits in the OFDM Symbol field.

19.4.6.6.4 Convolutional encoder

The DATA field, composed of SERVICE, PSDU, tail, and pad parts, shall be coded with a convolutional encoder of coding rate R = 1/2, 2/3, or 3/4, corresponding to the desired data rate. The convolutional encoder shall use the industry-standard generator polynomials, $g_0 = 133_8$ and $g_1 = 171_8$, of rate R = 1/2, as shown in Figure 114. The bit denoted as "A" shall be output from the encoder before the bit denoted as "B." Higher rates are derived from it by employing "puncturing." Puncturing is a procedure for omitting some of the encoded bits in the transmitter (thus reducing the number of transmitted bits and increasing the coding rate) and inserting a dummy "zero" metric into the convolutional decoder on the receive side in place of the omitted bits. The puncturing patterns are illustrated in Figure ***.

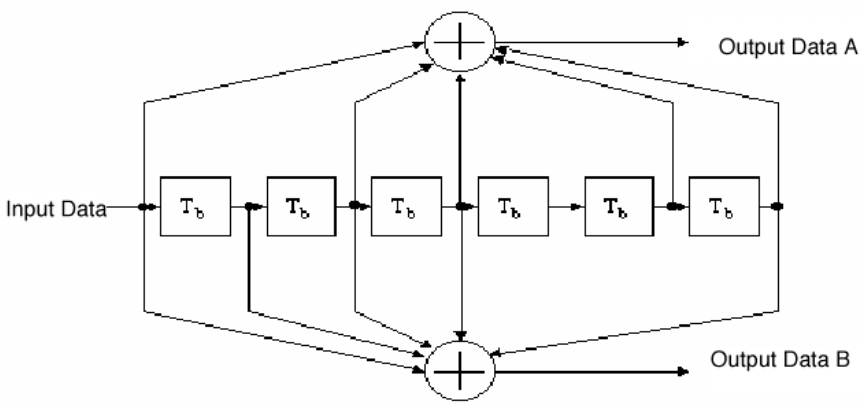

Figure *—Convolutional encoder (k = 7)**

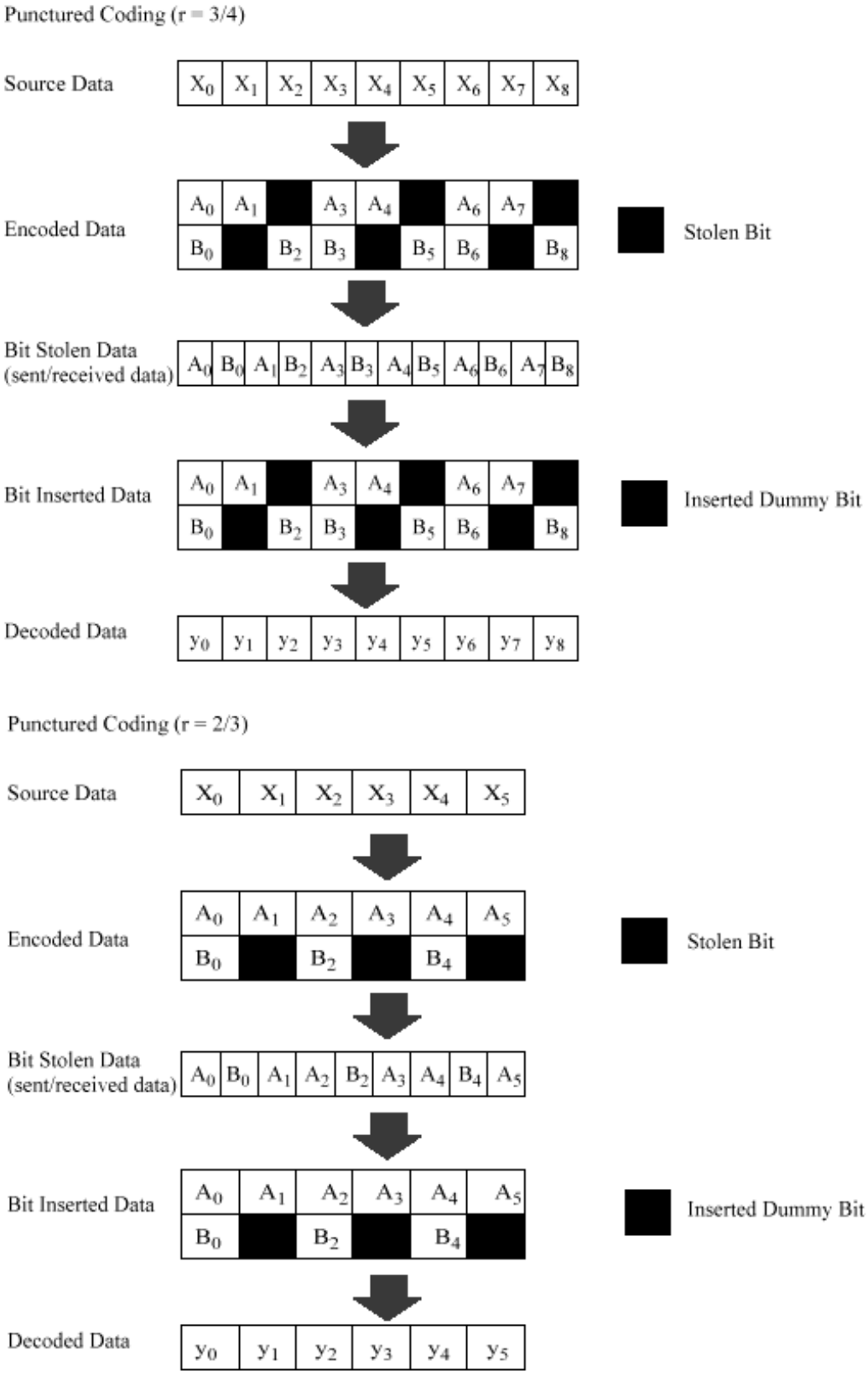

Figure 115—An example of the bit-stealing and bit-insertion procedure (r = 3/4, 2/3)

19.4.6.6.5 Data interleaving

All encoded data bits shall be interleaved by a block interleaver with a block size corresponding to the number of bits in a single OFDM symbol, N_{CBPS}. The interleaver is defined by a two-step permutation. The first permutation ensures that adjacent coded bits are mapped onto nonadjacent subcarriers. The second ensures that adjacent coded bits are mapped alternately onto less and more significant bits of the constellation and, thereby, long runs of low reliability (LSB) bits are avoided.

We shall denote by k the index of the coded bit before the first permutation; i shall be the index after the first and before the second permutation, and j shall be the index after the second permutation, just prior to modulation mapping.

The first permutation is defined by the rule

$i = (N_{CBPS}/16)(k \bmod 16) + \mathrm{floor}(k/16)$ $k = 0,1,\ldots,N_{CBPS} - 1$

The function floor (.) denotes the largest integer not exceeding the parameter.

The second permutation is defined by the rule

$j = s \times \mathrm{floor}(i/s) + (i + N_{CBPS} - \mathrm{floor}(16 \times i/N_{CBPS})) \bmod s$ $i = 0,1,\ldots N_{CBPS} - 1$

The value of s is determined by the number of coded bits per subcarrier, N_{BPSC}, according to

$s = \max(N_{BPSC}/2,1)$

The deinterleaver, which performs the inverse operation, is also defined by two permutations.

Here we shall denote by j the index of the original received bit before the first permutation; i shall be the index after the first and before the second permutation, and k shall be the index after the second permutation, just prior to delivering the coded bits to the convolutional (Viterbi) decoder.

The first permutation is defined by the rule

$i = s \times \mathrm{floor}(j/s) + (j + \mathrm{floor}(16 \times j/N_{CBPS})) \bmod s$ $j = 0,1,\ldots N_{CBPS} - 1$

where

s is defined above for the interleaver.

This permutation is the inverse of the interleaver permutation described above.

The second permutation is defined by the rule

$k = 16 \times i - (N_{CBPS} - 1)\mathrm{floor}(16 \times i/N_{CBPS})$ $i = 0,1,\ldots N_{CBPS} - 1$

This permutation is the inverse of the interleaver permutation described above.

19.4.6.6.6 Subcarrier modulation mapping

The OFDM subcarriers shall be modulated by using BPSK, QPSK, 16-QAM, or 64-QAM modulation, depending on the RATE requested. The encoded and interleaved binary serial input data shall be divided into groups of N_{BPSC} (1, 2, 4, or 6) bits and converted into complex numbers representing BPSK, QPSK, 16-QAM, or 64-QAM constellation points. The conversion shall be performed according to Gray-coded constellation mappings, illustrated in Figure ***, with the input bit, b_0, being the earliest in the stream. The output values, d, are formed by multiplying the resulting (I+jQ) value by a normalization factor K MOD, as described in this equation.

$d = (I + jQ) \times K_{MOD}$

The normalization factor, K MOD, depends on the base modulation mode, as prescribed in Table ***. The purpose of the normalization factor is to achieve the same average power for all mappings. In practical implementations, an approximate value of the normalization factor can be used, as long as the device conforms with the modulation accuracy requirements described in ***.

Table *—Modulation-dependent normalization factor K_{MOD}**

Modulation	K_{MOD}
BPSK	1
QPSK	$1/\sqrt{2}$
16-QAM	$1/\sqrt{10}$
64-QAM	$1/\sqrt{42}$

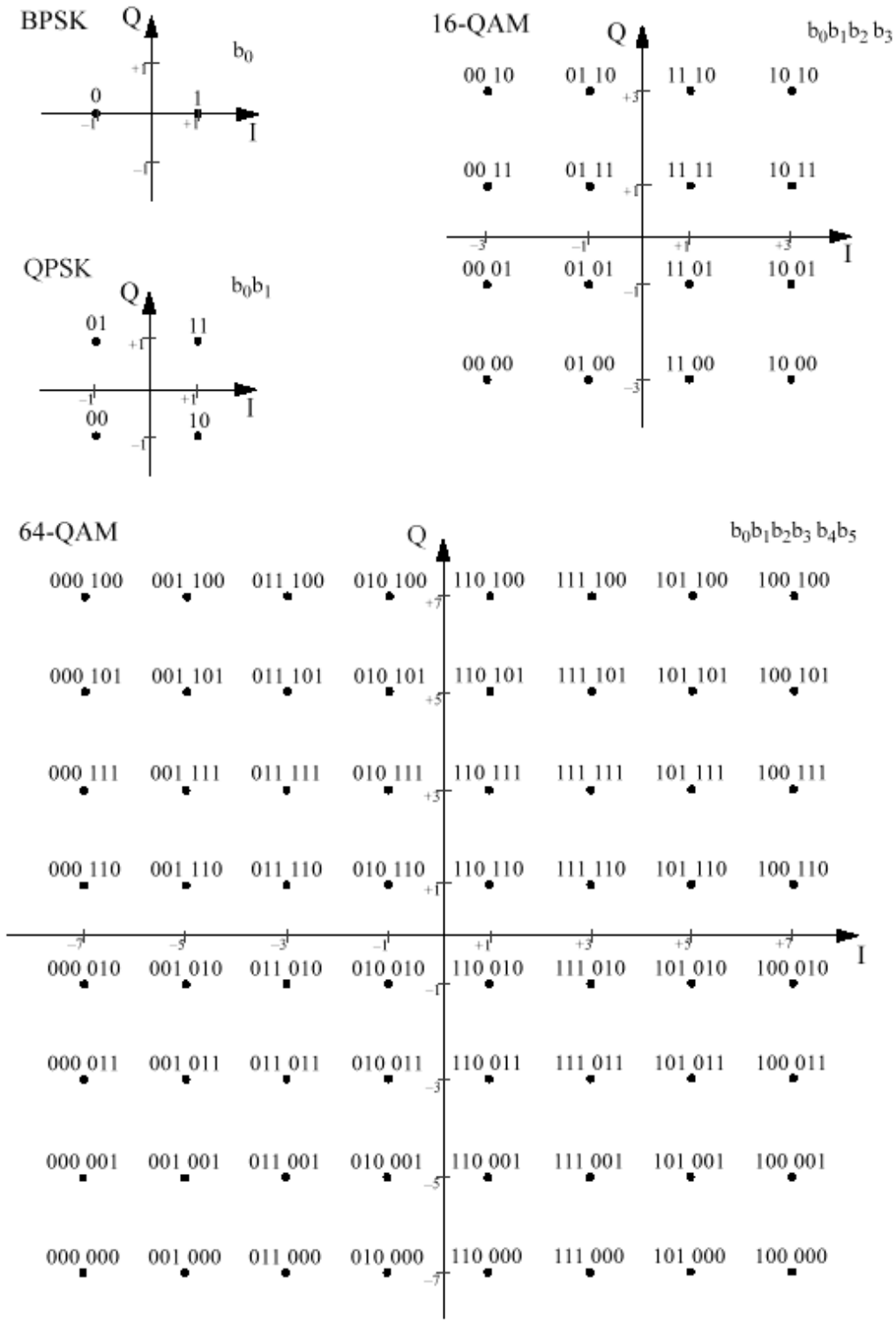

Figure *—BPSK, QPSK, 16-QAM, and 64-QAM constellation bit encoding**

For BPSK, b_0 determines the I value, as illustrated in Table ***. For QPSK, b_0 determines the I value and b_1 determines the Q value, as illustrated in Table ***. For 16-QAM, b_0 b_1 determines the I value and b_2

b_3 determines the Q value, as illustrated in Table ***. For 64-QAM, b_0 b_1 b_2 determines the I value and b_3 b_4 b_5 determines the Q value, as illustrated in Table ***.

Table *—BPSK encoding table**

Input bit (b_0)	I-out	Q-out
0	–1	0
1	1	0

Table *—QPSK encoding table**

Input bit (b_0)	I-out
0	–1
1	1

Input bit (b_1)	Q-out
0	–1
1	1

Table *—16-QAM encoding table**

Input bits (b_0 b_1)	I-out
00	–3
01	–1
11	1
10	3

Input bits (b_2 b_3)	Q-out
00	–3
01	–1
11	1
10	3

Table *—64-QAM encoding table**

Input bits (b_0 b_1 b_2)	I-out
000	–7
001	–5
011	–3
010	–1
110	1
111	3
101	5
100	7

Input bits (b_3 b_4 b_5)	Q-out
000	–7
001	–5
011	–3
010	–1
110	1
111	3
101	5
100	7

19.4.6.6.7 Pilot subcarriers

In each OFDM symbol, four of the subcarriers are dedicated to pilot signals in order to make the coherent detection robust against frequency offsets and phase noise. These pilot signals shall be put in subcarriers –21, –7, 7 and 21. The pilots shall be BPSK modulated by a pseudo-random binary sequence to prevent the generation of spectral lines. The contribution of the pilot subcarriers to each OFDM symbol is described in 19.4.6.6.8.

19.4.6.6.8 OFDM modulation

The stream of complex numbers is divided into groups of $N_{SD} = 48$ complex numbers. We shall denote this by writing the complex number $d_{k,n}$, which corresponds to subcarrier k of OFDM symbol n, as follows:

$d_{k,n} = d_{k+ N_{SD} \times n}$ ’ $k = 0, \ldots N_{SD} – 1$, $n = 0, \ldots N_{SYM} – 1$

where

N_{SYM} is the number of OFDM symbols.

An OFDM symbol, $r_{DATA,n}(t)$, is defined as

$$r_{DATA,n}(t) = w_{TSYM}(t)\left(\sum_{k=0}^{N_{SD}-1} d_{k,n}\exp((j2\pi M(k)\Delta_F(t-T_{GI})) + p_{n+1}\sum_{k=-N_{ST}/2}^{N_{ST}/2} P_k\exp(j2\pi k\Delta_F(t-T_{GI}))\right)$$

where the function, *M(k)*, defines a mapping from the logical subcarrier number 0 to 47 into frequency offset indices -26 to 26, skipping the pilot subcarrier locations and the 0 th (dc) subcarrier.

$$M(k) = \begin{cases} k-26 & 0 \le k \le 4 \\ k-25 & 5 \le k \le 17 \\ k-24 & 18 \le k \le 23 \\ k-23 & 24 \le k \le 29 \\ k-22 & 30 \le k \le 42 \\ k-21 & 43 \le k \le 47 \end{cases}$$

The contribution of the pilot subcarriers for the n th OFDM symbol is produced by Fourier transform of sequence P, given by

$P_{-26,26}$ = {0, 0, 0, 0, 0, 1, 0, 0, 0, 0, 0, 0, 0, 0, 0, 0, 0, 0, 0, 1, 0, 0, 0, 0, 0, 0, 0,

0, 0, 0, 0, 0, 0, 1, 0, 0, 0, 0, 0, 0, 0, 0, 0, 0, 0, 0, 0, –1, 0, 0, 0, 0, 0}

The polarity of the pilot subcarriers is controlled by the sequence, p_n, which is a cyclic extension of the 127 elements sequence and is given by

$P_{0..126v}$ = {1,1,1,1, -1,-1,-1,1, -1,-1,-1,-1, 1,1,-1,1, -1,-1,1,1, -1,1,1,-1, 1,1,1,1, 1,1,-1,1,
1,1,-1,1, 1,-1,-1,1, 1,1,-1,1, -1,-1,-1,1, -1,1,-1,-1, 1,-1,-1,1, 1,1,1,1, -1,-1,1,1,
-1,-1,1,-1, 1,-1,1,1, -1,-1,-1,1, 1,-1,-1,-1, -1,1,-1,-1, 1,-1,1,1, 1,1,-1,1, -1,1,-1,1,
-1,-1,-1,-1, -1,1,-1,1, 1,-1,1,-1, 1,1,1,-1, -1,1,-1,-1, -1,1,1,1, -1,-1,-1,-1, -1,-1,-1}

The sequence, p_n, can be generated by the scrambler defined by Figure *** when the “all ones” initial state is used, and by replacing all “1’s” with –1 and all “0’s” with 1. Each sequence element is used for one OFDM symbol. The first element, p_0, multiplies the pilot subcarriers of the first symbol, while the elements from p_1 on are used for the subsequent pilot symbols.

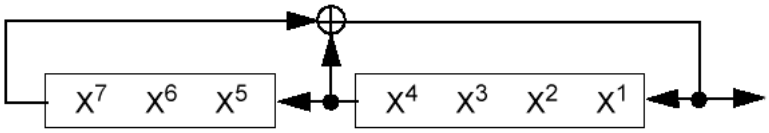

Figure * - Pilot pn sequence generator**

The subcarrier frequency allocation is shown in Figure ***. To avoid difficulties in dealing with D/A and A/D converter
DC offsets and carrier feedthrough in the RF system, the subcarrier falling at DC (0 th subcarrier) is not used.

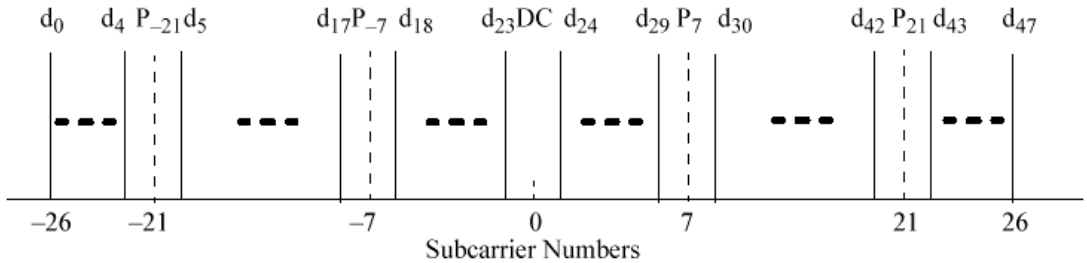

Figure * - Subcarrier frequency allocation**

The concatenation of N SYM OFDM symbols can now be written as

$$r_{DATA}(t) = \sum_{n=0}^{N_{SYM}-1} r_{DATA,n}(t - nT_{SYM})$$

19.4.6.6.9 Signal Extension

The Signal Extension is a 6 microsecond cyclic extension of the last OFDM symbol. More precisely if $r_{DATA,LAST}(t)$ for t=0 to 4 microseconds is the last OFDM symbol, then the signal extension is:

$$r_{extension}(t) = \begin{cases} r_{DATA,LAST}(t) \text{ for } t = 0 \text{ to } 4 \text{ microseconds} \\ r_{DATA,LAST}(t - 4e^{-6}) \text{ for } 4 < t \le 6 \text{ microseconds} \end{cases}$$

19.4.6.7 Channel Agility (optional)

This Channel Agility option allows an implementation to overcome some inherent difficulty with static channel assignments (a tone jammer), without burdening all implementations with the added cost of this capability. When the Channel Agility option is enabled, the PHY shall meet the requirements on channel switching and settling time, as described in 19.4.6.12, and the hop sequences described below. This option can also be used to implement IEEE 802.11-compliant systems that are interoperable between both FH and DS modulations. Annex F contains a description of the expected behavior when such networks are employed.

19.4.6.7.1 Hop sequences

The hop sequences for each of the specified geographical areas are defined with two sets. Extended Rate frequency channels referred to in this subclause are defined in Table ***.

The first set (Figure *** and Figure ***) uses non-overlapping frequency channels to allow the Extended Rate systems to minimize interference degradation. The synchronization of frequency hopping is performed by the MAC sublayer management entity, as defined in 11.1.15 of IEEE 802.11, 1999 Edition for the FH PHY. The PLME SAP service primitives used to command a new frequency channel are defined in 10.4 of IEEE Std 802.11, 1999 Edition.

The second set (Figure *** and Figure ***) uses half overlapping frequency channels, with 10 MHz center frequency spacing, to enable interoperability with 1 Mbit/s and 2 Mbit/s FH systems hopping with the approved IEEE 802.11 hop sequences. The Extended Rate hop frequency is calculated from the specific 1 MHz channel chosen for a given hop by picking the closest Extended Rate channel within the set. Where there is a choice of two channels, the lower one shall be the one chosen. Therefore, the chosen channel shall be no more than ± 5 MHz of the channel center of the FH channel. When operating on the FH channels beyond ± 5 MHz of the closest Extended Rate channel specified in the set, the Extended Rate mode shall not be used and all FH transmissions shall occur at the 1 Mbit/s or 2 Mbit/s rate.

19.4.6.7.2 Operating channels

The operating channels for specified geographical areas are defined in Table *** and Table ***.

Table *—North American operating channels**

Set	Number of channels	ER/OFDM channel numbers
1	3	1, 6, 11
2	6	1, 3, 5, 7, 9, 11

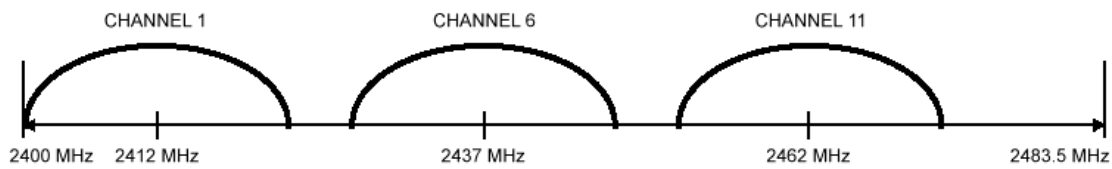

Figure *—North American channel selection—non-overlapping**

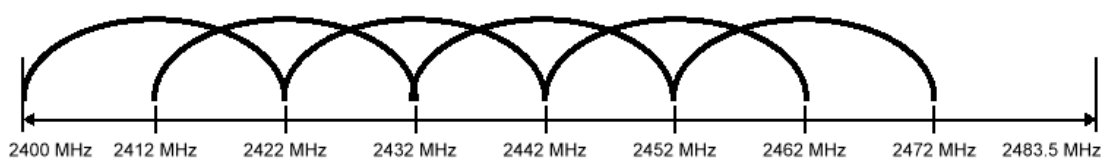

Figure *—North American channel selection—overlapping**

Table *—European operating channels (except France and Spain)**

Set	Number of channels	ER/OFDM channel numbers
1	3	1, 7, 13
2	7	1, 3, 5, 7, 9, 11, 13

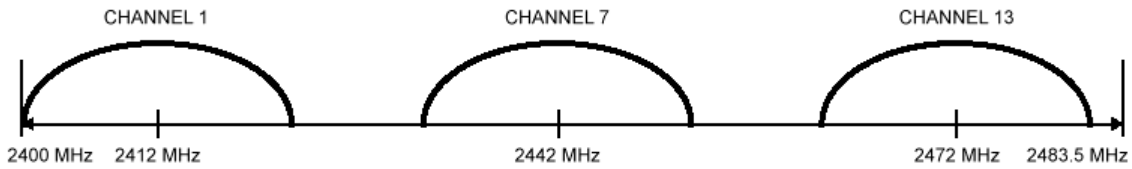

Figure 143—European channel selection—non-overlapping

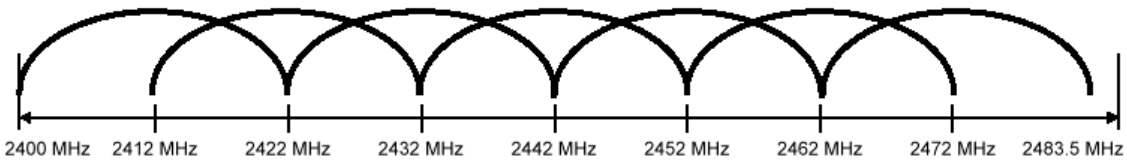

Figure *—European channel selection—overlapping**

19.4.6.7.3 Hop patterns

A frequency-hopping pattern, Fx, consists of a permutation of all frequency channels defined in Table 111 and Table 112. For a given pattern number, x, the hopping sequence can be written as

Fx = {fx (1), fx (2), ..., fx (p)}

where

fx (i) is the channel number (as defined in 14.6.4) for ith frequency in the xth hopping pattern;

p is the number of hops in pseudo-random hopping pattern before repeating sequence (79 for North America and most of Europe).

The frequency-hopping patterns for Set 1 of each geographic area are based on the hop patterns in Table *** and Table ***.

The frequency-hopping patterns for Set 2 of each geographic area are defined by the 1/2 Mbit/s FH PHY hop sequences, as described in the FH PHY (14.6.8). Given the hopping pattern number, x, and the index for the next frequency, i (in the range 1 to p), the channel number (as defined in 19.4.6.2) shall be selected with the following algorithm:

North America

f'x (i) = f'x (i) for 1 ' f'x (i) ' 11;

f'x (i) = null for f'x (i) < 1 and f'x (i) > 11;

f'x (i) = 2 × Int [({[b(i) + x] mod (79) +2} – 6) / 10] – 1;

with b(i) defined in Table 42 (14.6.8) of IEEE Std 802.11, 1999 Edition.

Most of Europe

f'x (i) = f'x (i) for 1 ' f'x (i) ' 13;

f'x (i) = null for f'x (i) < 1 and f'x (i) > 13;

f'x (i) = 2 × Int [({[b(i) + x] mod (79) +2} – 6) / 10] – 1;

with b(i) defined in Table 42 (14.6.8) of IEEE Std 802.11, 1999 Edition.

Table *—North American Set 1 hop patterns**

Index	Pattern 1	Pattern 2
1	1	1
2	6	11
3	11	6

Table *—European Set 1 hop patterns (except France and Spain)**

Index	Pattern 1	Pattern 2
1	1	1
2	7	13
3	13	7

19.4.6.8 Transmit and receive in-band and out-of-band spurious emissions

The Extended Rate PHY shall conform to in-band and out-of-band spurious emissions as set by regulatory bodies. For the USA, refer to FCC 15.247, 15.205, and 15.209. For Europe, refer to ETS 300–328. For Japan, refer to the MPT ordinance for Regulating Radio Equipment, Article 49-20.

19.4.6.9 Transmit-to-receive (TX-to-RX) turnaround time

The TX-to-RX turnaround time shall be less than 10 µs, including the power-down ramp specified in 19.4.7.6.

The TX-to-RX turnaround time shall be measured at the air interface from the trailing edge of the last transmitted symbol including the signal extension/SIFs pad to the valid CCA detection of the incoming signal. The CCA should occur within 25 µs (10 µs for turnaround time, plus 15 µs for energy detect), or by the next slot boundary occurring after the 25 µs has elapsed (see 19.4.8.4). A receiver input signal 3 dB above the ED threshold described in 19.4.8.4 shall be present at the receiver.

19.4.6.10 Receive-to-transmit (RX-to-TX) turnaround time

The RX-to-TX turnaround time shall be measured at the MAC/PHY interface using PHYTXSTART.request, and shall be 5 µs. This includes the transmit power-up ramp described in 19.4.7.6.

19.4.6.11 Slot time

The slot time for the Extended Rate PHY shall be the sum of the RX-to-TX turnaround time (5 µs) and the energy detect time (15 µs specified in 19.4.8.4). The propagation delay shall be regarded as being included in the energy detect time.

19.4.6.12 Channel switching/settling time

When the Channel Agility option is enabled, the time to change from one operating channel frequency to another, as specified in 19.4.6.2, is 224 µs. A conformant PMD meets this switching time specification when the operating channel center frequency has settled to within ±60 kHz of the nominal channel center. Stations shall not transmit until after the channel change settling time.

19.4.6.13 Transmit and receive antenna port impedance

The impedance of the transmit and the receive antenna port(s) shall be 50 Ohms if the port is exposed.

19.4.6.14 Transmit and receive operating temperature range

Two temperature ranges are specified for full operation compliance to the Extended Rate PHY. Type 1 shall be defined as 0 °C to 40 °C, and is designated for office environments. Type 2 shall be defined as –30 °C to +70 °C, and is designated for industrial environments.

19.4.7 PMD transmit specifications

Subclauses 19.4.7.1 through 19.4.7.8 describe the transmit functions and parameters associated with the PMD sublayer.

19.4.7.1 Transmit power levels

The maximum allowable output power, as measured in accordance with practices specified by the appropriate regulatory bodies, is shown in Table ***. In the USA, the radiated emissions should also conform with the ANSI uncontrolled radiation emission standards (IEEE Std C95.1-1999).

Table *—Transmit power levels**

Maximum output power	Geographic location	Compliance document
1000 mW	USA	FCC 15.247
100 mW (EIRP)	Europe	ETS 300–328
10 mW/MHz	Japan	MPT ordinance for Reg-ulating Radio Equip-ment, Article 49-20

19.4.7.2 Transmit power level control

Power control shall be provided for transmitted power greater than 100 mW. A maximum of four power levels may be provided. As a minimum, a radio capable of transmission greater than 100 mW shall be capable of switching power back to 100 mW or less.

19.4.7.3 Transmit spectrum mask

The transmitted spectrum shall have a 0 dBr (dB relative to the maximum spectral density of the signal) bandwidth not exceeding 18 MHz, –20 dBr at 11 MHz frequency offset, –28 dBr at 20 MHz frequency offset and –40 dBr at 30 MHz frequency offset and above. The transmitted spectral density of the transmitted signal shall fall within the spectral mask, as shown in Figure ***. The measurements shall be made using a 100 kHz resolution bandwidth and a 1 kHz video bandwidth.

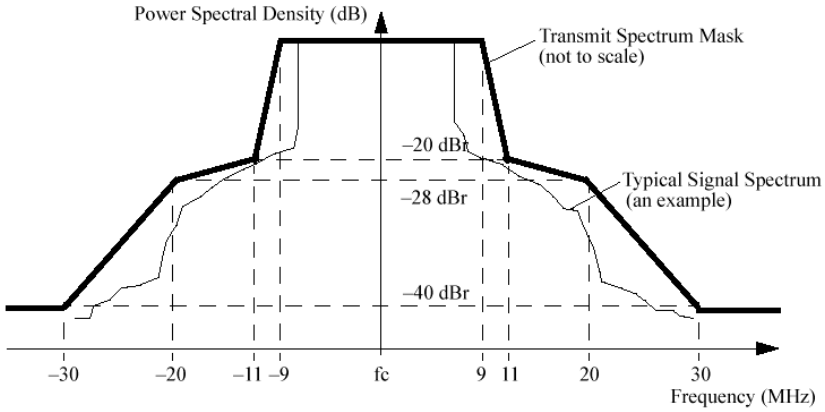

Figure *- Transmit Spectrum Mask**

19.4.7.4 Transmit center frequency tolerance

The transmitted center frequency tolerance shall be ± 25 ppm maximum. The transmit center frequency and the symbol clock frequency shall be derived from the same reference oscillator.

19.4.7.5 Transmit symbol clock frequency tolerance

The symbol clock frequency tolerance shall be ± 25 ppm maximum. The transmit center frequency and the symbol clock frequency shall be derived from the same reference oscillator.

19.4.7.6 Transmit power-on and power-down ramp

The transmit power-on ramp for 10% to 90% of maximum power shall be no greater than 2 µs. The transmit power-on ramp is shown in Figure ***.

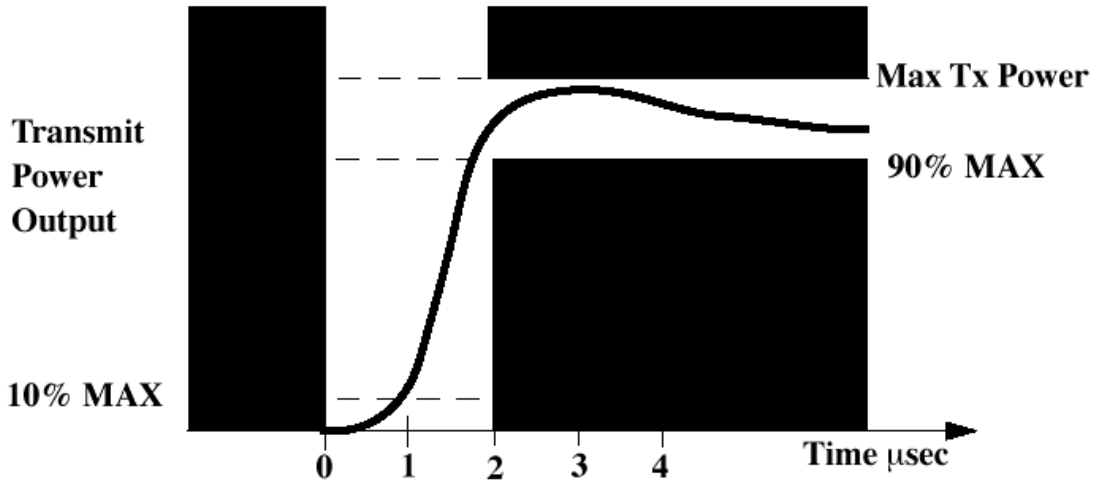

Figure *—Transmit power-on ramp**

The transmit power-down ramp for 90% to 10% maximum power shall be no greater than 2 µs. The transmit power-down ramp is shown in Figure ***.

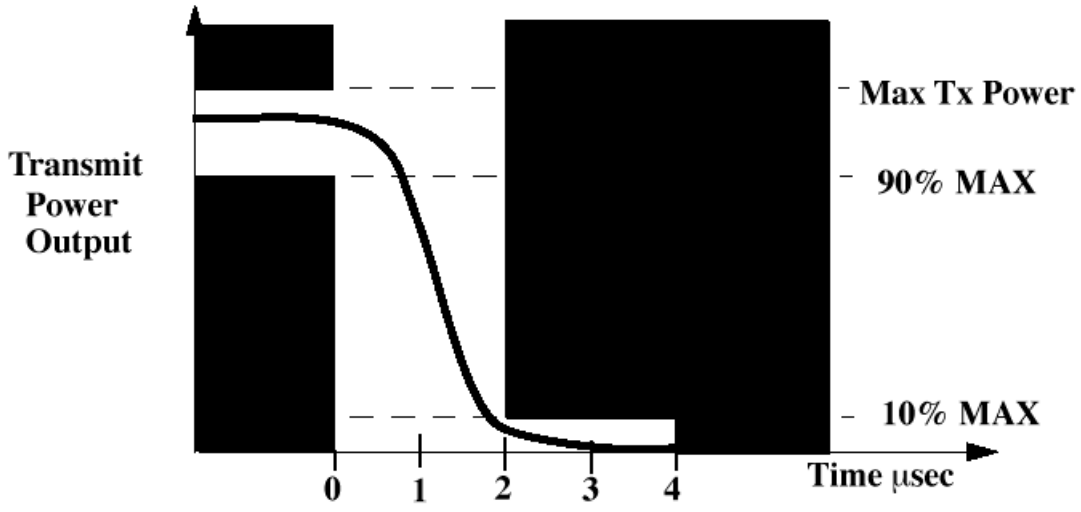

Figure *—Transmit power-down ramp**

The transmit power ramps shall be constructed such that the Extended Rate PHY emissions conform with spurious frequency product specification defined in 19.4.6.8.

19.4.7.7 Transmitter center frequency leakage

Modulation accuracy requirements are specified separately for the PLCP Preamble and PLCP Header and for the PSDU.

19.4.7.7.1 PLCP Preamble and PLCP Header transmitter RF carrier suppression

The RF carrier suppression, measured at the channel center frequency, shall be at least 15 dB below the peak SIN(x)/x power spectrum. The RF carrier suppression shall be measured while transmitting a repetitive 01 data sequence with the scrambler disabled using DQPSK modulation. A 100 kHz resolution bandwidth shall be used to perform this measurement.

19.4.7.7.2 PSDU transmitter center frequency leakage

Certain transmitter implementations may cause leakage of the center frequency component. Such leakage (which manifests itself in a receiver as energy in the center frequency component) shall not exceed -15 dB relative to overall transmitted power or, equivalently, +2 dB relative to the average energy of the rest of the subcarriers. The data for this test shall be derived from the channel estimation phase.

19.4.7.8 Transmit modulation accuracy

Modulation accuracy requirements are specified separately for the PLCP Preamble and PLCP Header and for the PSDU. A separate requirement covers the entire packet including the PLCP and PSDU.

19.4.7.8.1 PLCP Preamble and PLCP Header transmit modulation accuracy

The transmit modulation accuracy requirement for the Extended Rate PHY PLCP Preamble and PLCP Header shall be based on the difference between the actual transmitted waveform and the ideal signal waveform. Modulation accuracy shall be determined by measuring the peak vector error magnitude during each chip period. Worst-case vector error magnitude shall not exceede 0.35 for the normalized sampled chip data. The ideal complex I and Q constellation points associated with DQPSK modulation, (0.707,0.707), (0.707, –0.707), (–0.707, 0.707), (–0.707, –

0.707), shall be used as the reference. These measurements shall be from baseband I and Q sampled data after recovery through a reference receiver system.

Figure*** illustrates the ideal DQPSK constellation points and range of worst-case error specified for modulation accuracy.

Error vector measurement requires a reference receiver capable of carrier lock. All measurements shall be made under carrier lock conditions. The distortion induced in the constellation by the reference receiver shall be calibrated and measured. The test data error vectors described below shall be corrected to compensate for the reference receiver distortion.

The IEEE 802.11b-compatible radio shall provide an exposed TX chip clock, which shall be used to sample the I and Q outputs of the reference receiver.

The measurement shall be made under the conditions of continuous DQPSK transmission using scrambled all one's.

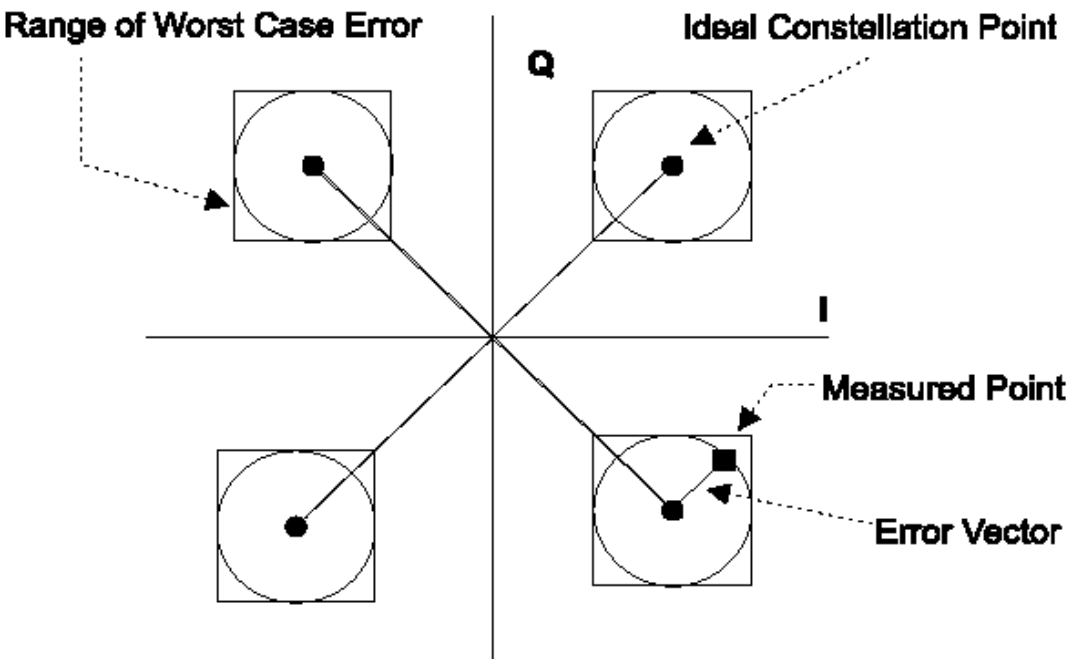

Figure *—Modulation accuracy measurement example**

The eye pattern of the I channel shall be used to determine the I and Q sampling point. The chip clock provided by the vendor radio shall be time delayed, such that the samples fall at a 1/2 chip period offset from the mean of the zero crossing positions of the eye (see Figure 149). This is the ideal center of the eye and may not be the point of maximum eye opening.

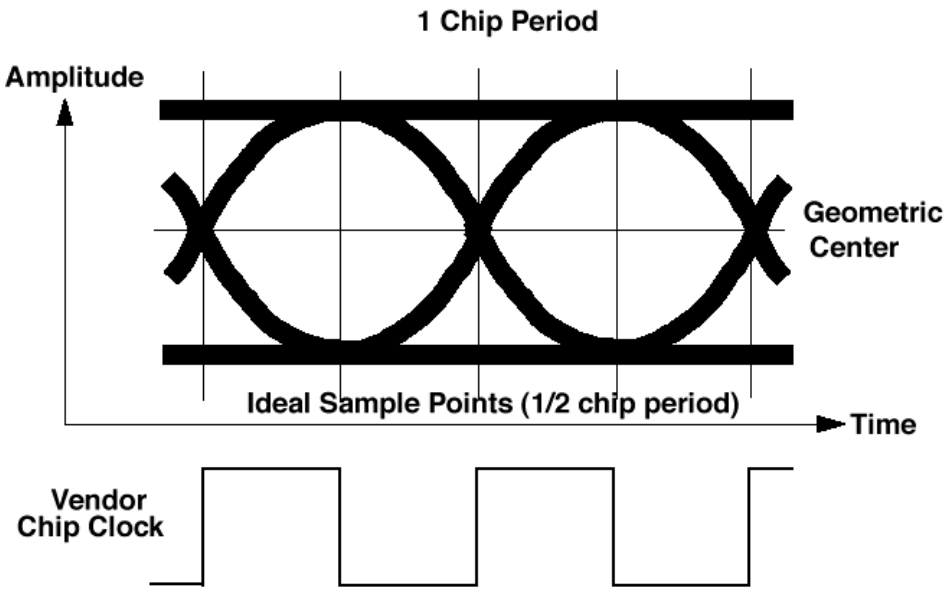

Figure *—Chip clock alignment with baseband eye pattern**

Using the aligned chip clock, 1000 samples of the I and Q baseband outputs from the reference receiver are captured. The vector error magnitudes shall be calculated as follows:

Calculate the dc offsets for I and Q samples

$$I_{\text{mean}} = \sum_{n=0}^{999} I(n) / 1000$$

$$Q_{\text{mean}} = \sum_{n=0}^{999} Q(n) / 1000$$

Calculate the dc corrected I and Q samples for all n = 1000 sample pairs

I dc (n) = I(n) – I mean

Q dc (n) = Q(n) – Q mean

Calculate the average magnitude of the I and Q samples

$$I_{\text{mag}} = \sum_{n=0}^{999} |I_{\text{dc}}(n)| / 1000$$

$$Q_{\text{mag}} = \sum_{n=0}^{999} |Q_{\text{dc}}(n)| / 1000$$

Calculate the normalized error vector magnitude for the I dc (n)/Q dc (n) pairs

$$V_{\mathrm{err}}(n) = \left[\frac{1}{2} \times (\{|I_{\mathrm{dc}}(n)| - I_{\mathrm{mag}}\}^2 + \{|Q_{\mathrm{dc}}(n)| - Q_{\mathrm{mag}}\}^2)\right]^{\frac{1}{2}} - V_{\mathrm{correction}}$$

where

V correction is the error induced by the reference receiver system.

A vendor Extended Rate PHY implementation shall be compliant if for all n = 1000 samples, the following condition is met:

V err (n) < 0.35

19.4.7.8.2 PSDU transmitter constellation error

The relative constellation RMS error, averaged over subcarriers, OFDM frames, and packets, shall not exceed a data-rate dependent value according to Table ***.

Table 90—Allowed relative constellation error versus data rate

Data rate (Mbits/s)	Relative constellation error (dB)
6	–5
9	–8
12	–10
18	–13
24	–16
36	–19
48	–22
54	–25

19.4.7.8.3 PSDU transmit modulation accuracy test

The transmit modulation accuracy test shall be performed by instrumentation capable of converting the transmitted signal into a stream of complex samples at 20 Msamples/s or more, with sufficient accuracy in terms of I/Q arm amplitude and phase balance, dc offsets, phase noise, etc. A possible embodiment of such a setup is converting the signal to a low IF frequency with a microwave synthesizer, sampling the signal with a digital oscilloscope and decomposing it digitally into quadrature components. The sampled signal shall be processed in a manner similar to an actual receiver, according to the following steps, or an equivalent procedure:

a) Start of frame shall be detected.

b) Transition from short sequences to channel estimation sequences shall be detected, and fine timing (with one sample resolution) shall be established.

c) Coarse and fine frequency offset estimations shall be performed.

d) The packet shall be derotated according to estimated frequency offset.

e) The complex channel response coefficients shall be estimated for each of the subcarriers.

f) For each of the OFDM data symbols: transform the symbol into subcarrier received values, estimate the phase from the pilot subcarriers, derotate the subcarrier values according to estimated phase, and divide each subcarrier value by its complex estimated channel frequency response coefficient.

g) For each data-carrying subcarrier, find the closest constellation point and compute the Euclidean distance from it.

h) Compute the RMS average of all errors in a packet. It is given by:

$$Error_{RMS} = \frac{\sum_{i=1}^{N_f} \sqrt{\frac{\sum_{j=1}^{L_P}\left[\sum_{k=1}^{52}\{(I(i,j,k)-I_0(i,j,k))^2+(Q(i,j,k)-Q_0(i,j,k))^2\}\right]}{52L_P \times P_0}}}{N_f}$$

where

L_P is the length of the packet;

N_f is the number of frames for the measurement;

($I_0(i,j,k)$, $Q_0(i,j,k)$) denotes the ideal symbol point of the i th frame, j th OFDM symbol of the frame, k th subcarrier of the OFDM symbol in the complex plane;

($I(i,j,k)$, $Q(i,j,k)$) denotes the observed point of the i th frame, j th OFDM symbol of the frame,

k th subcarrier of the OFDM symbol in the complex plane;

P_0 is the average power of the constellation.

The vector error on a phase plane is shown in Figure ***.

The test shall be performed over at least 20 frames (N_f), and the RMS average shall be taken. The packets under test shall be at least 16 OFDM symbols long. Random data shall be used for the symbols.

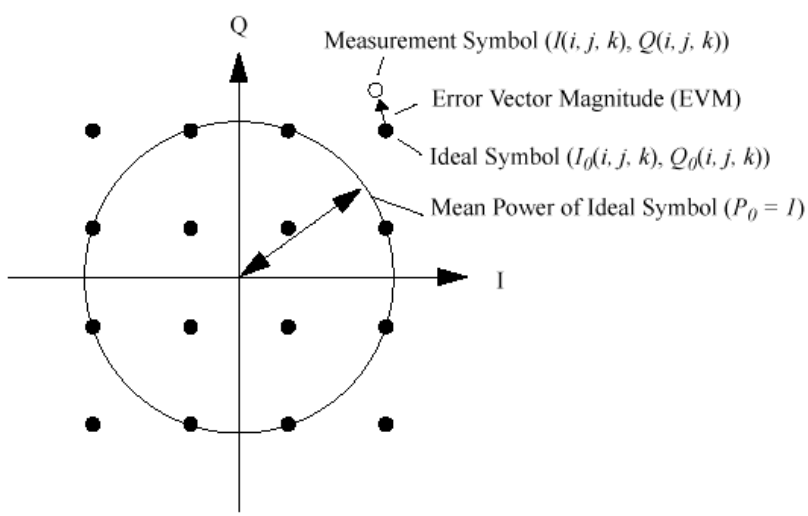

Figure *- Constellation Error**

19.4.7.8.4 Packet Transmit Accuracy

19.4.8 PMD receiver specifications

Subclauses 19.4.8.1 through 19.4.8.4 describe the receive functions and parameters associated with the PMD sublayer.

19.4.8.1 Receiver minimum input level sensitivity

The packet error rate (PER) shall be less than 10% at a PSDU length of 1000 bytes for rate-dependent input levels shall be the numbers listed in Table *** or less. The minimum input levels are measured at the antenna connector (NF of 12 dB and 5 dB implementation margins are assumed).

Table *—Receiver performance requirements**

Data rate (Mbits/s)	Minimum sensitivity (dBm)	Adjacent channel rejection (dB)	Alternate adjacent channel rejection (dB)
6	–80	16	32
9	–79	15	31
12	–77	13	29
18	–75	11	27
24	–72	8	24
36	–68	4	20
48	–64	0	16
54	–63	–1	15

19.4.8.2 Receiver maximum input level

The receiver shall provide a maximum FER of 8×10^{-2} at a PSDU length of 1024 octets for a maximum input level of –30 dBm measured at the antenna. This FER shall be specified for all ER/OFDM data rates. For receivers capable of extended rate (ER/OFDM) data rates, this requirement shall also apply to basic rate (BR/DSSS) and high rate (HR/DSSS) data rates.

19.4.8.3 Receiver adjacent channel rejection

The adjacent channel rejection shall be measured by setting the desired signal's strength 3 dB above the rate-dependent sensitivity specified in Table 91 and raising the power of the interfering signal until 10% PER is reached for a PSDU length of 1000 bytes. The power difference between the interfering and the desired channel is the corresponding adjacent channel rejection. The interfering signal in the adjacent channel shall be a conformant OFDM signal, unsynchronized with the signal in the channel under test. For a conformant OFDM PHY the corresponding rejection shall be no less than specified in Table ***.

19.4.8.4 CCA

The Extended Rate PHY shall provide the capability to perform CCA according to at least one of the following three methods:

— CCA Mode 1: Energy above threshold. CCA shall report a busy medium upon detecting any energy above the ED threshold.

— CCA Mode 4: Carrier sense with timer. CCA shall start a timer whose duration is 3.65 ms and report a busy medium only upon the detection of an Extended Rate PHY signal. CCA shall report an IDLE medium after the timer

expires and no Extended Rate PHY signal is detected. The 3.65 ms timeout is the duration of the longest possible 5.5 Mbit/s PSDU.

— CCA Mode 5: A combination of carrier sense and energy above threshold. CCA shall report busy at least while an Extended Rate PPDU with energy above the ED threshold is being received at the antenna.
The energy detection status shall be given by the PMD primitive, PMD_ED. The carrier sense status shall be given by PMD_CS. The status of PMD_ED and PMD_CS is used in the PLCP convergence procedure to indicate activity to the MAC through the PHY interface primitive, PHY-CCA.indicate.

A busy channel shall be indicated by PHY-CCA.indicate of class BUSY. A clear channel shall be indicated by PHY-CCA.indicate of class IDLE.

The PHY MIB attribute, dot11CCAModeSupported, shall indicate the appropriate operation modes. The PHY shall be configured through the PHY MIB attribute, dot11CurrentCCAMode.

The CCA shall indicate TRUE if there is no energy detect or carrier sense. The CCA parameters are subject to the following criteria:

a) If a valid Extended Rate signal is detected during its preamble within the CCA assessment window, the energy detection threshold shall be less than or equal to –76 dBm for TX power > 100 mW;
–73 dBm for 50 mW < TX power < 100 mW; and –70 dBm for TX power < 50 mW.

b) With a valid signal (according to the CCA mode of operation) present at the receiver antenna within 5 µs of the start of a MAC slot boundary, the CCA indicator shall report channel busy before the end of the slot time. This implies that the CCA signal is available as an exposed test point. Refer to Figure 47 of IEEE Std 802.11, 1999 Edition for a slot time boundary definition.

c) In the event that a correct PLCP header is received, the Extended Rate PHY shall hold the CCA signal inactive (channel busy) for the full duration, as indicated by the PLCP LENGTH field. Should a loss of carrier sense occur in the middle of reception, the CCA shall indicate a busy medium for the intended duration of the transmitted PPDU. Upon reception of a correct PLCP header, the timer of CCA Mode 2 shall be overridden by this requirement.

Conformance to the Extended Rate PHY CCA shall be demonstrated by applying an equivalent Extended Rate compliant signal above the appropriate ED threshold (item a), such that all conditions described in items (b) and (c) above are demonstrated.

APPENDIX AA

AA.1 Single-Carrier to Multi-carrier Transition Requirements

The single-carrier signal segment of the packet is required to have a coherent relationship with the OFDM segment of the packet. Signal state information will be transferable from one symbol to the next, even when transitioning to OFDM. This enables high-performance, coherent receiver operation across the whole packet.

This requirement is no different in nature than that stated in other standards such as the IEEE802.11 DSSS standard, the IEEE802.11b standard and the IEEE802.11a standard. The distinction being, there the standards use a signaling scheme that is either wholly single-carrier or wholly multi-carrier. In contrast, for this mode of the 802.11g standard, both single-carrier and multi-carrier signaling is used within the context of a single packet.

This section specifies the coherent relationship between the single-carrier segment and the OFDM segment, so that the receiver has the opportunity to track through the transition without any forced parameter reacquisition. The single-carrier preamble and header provide all parametric information required for demodulation of the OFDM to within conventional estimation-in-noise accuracy. While multi-carrier sync features are provided for convenience at OFDM onset, if and how to use the multi-carrier sync for reacquisition is an implementer's decision. Multi-carrier sync is not necessary. The packet is coherent throughout.

As shown in Figure X-1, the ideal transition would provide a constant carrier-frequency and -phase, a constant power, a constant spectrum and a constant timing relationship. The following subparagraphs establish the ideal transition characteristics for the transmit signal. An additional paragraph specifies the required implementation fidelity or accuracy.

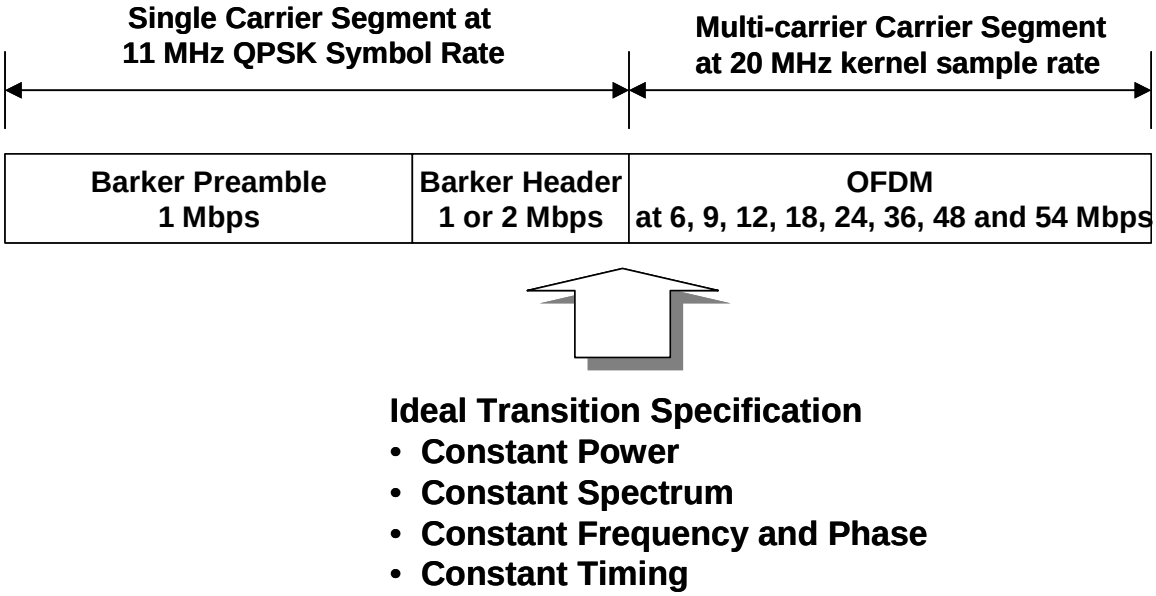

Figure X-1 Single-carrier to multi-carrier transition definition.

AA.1 Spectral Binding Requirement

The spectral binding requirement allows the receiver's equalizer information to be transferred from the single-carrier packet segment to the multi-carrier packet segment. This requirement establishes a coherent relationship between the end-to-end frequency responses of the single-carrier and multi-carrier segments.

During reception of the single-carrier preamble-and-header, the receiver may estimate the channel impulse response (CIR). In practice, this could be accomplished through Barker-code correlation. The channel impulse response contains end-to-end frequency response information about the linear distortion experienced by the signal due to filters and multipath. This distortion can be mitigated with an equalizer or other commonly known techniques.

The CIR estimate generated during the single-carrier packet segment will include the single-carrier's pulse-shaping-filter frequency response used to control the single-carrier's transmit spectrum and transmit impulse response. The single-carrier's pulse-shaping filter may be distinct from the shaping technique used for the multi-carrier segment.

The spectral binding requirement states that the linear distortion experienced by the single-carrier signal and the linear distortion experienced by the multi-carrier signal will have a known relationship. This relationship is defined by this specification and will be manifested by all compliant transmit radios. This will allow any receiver to exploit channel information derived during the single-carrier segment and reuse the channel information during the multi-carrier segment, if desired.

Three elements have been itemized for specification to achieve spectral binding. All three elements are necessary to achieve spectral binding, and they are discussed in the next three sub-sections. The first element itemized for specification focuses on distortions common to both the single-carrier packet segment and the multi-carrier packet segment. The second element itemized for specification deals with pulse shaping unique to the OFDM packet segment. The third element itemized for specification deals with pulse shaping unique to the single-carrier packet segment. The multi-carrier pulse shape discussion precedes the single-carrier's pulse shape discussion because it is believed this will be a more comfortable progression, due to similar multi-carrier pulse shaping considerations contained in the 802.11a specification.

AA.1.1 Common Linear Distortions

Separate from the single-carrier and the multi-carrier pulse shaping, transmit signal generated will be designed to provide linear distortion continuity to the receiver's demodulation algorithms. The common linear distortion requirement is illustrated in Figure A.1.1-1, where it is shown that the processing at the receiver assumes that the dominant linear distortions are induced on all waveform segments. The receiver observes the composite linear distortion due to transmit radio filters, due to multipath filtering, and due to receive radio filters. In general, the receiver is unable to decompose the distortion into separate physical components and is only able to observer the aggregate effect. This specification constrains only the linear distortions in the transmit radio, since that is what is necessary to ensure interoperability.

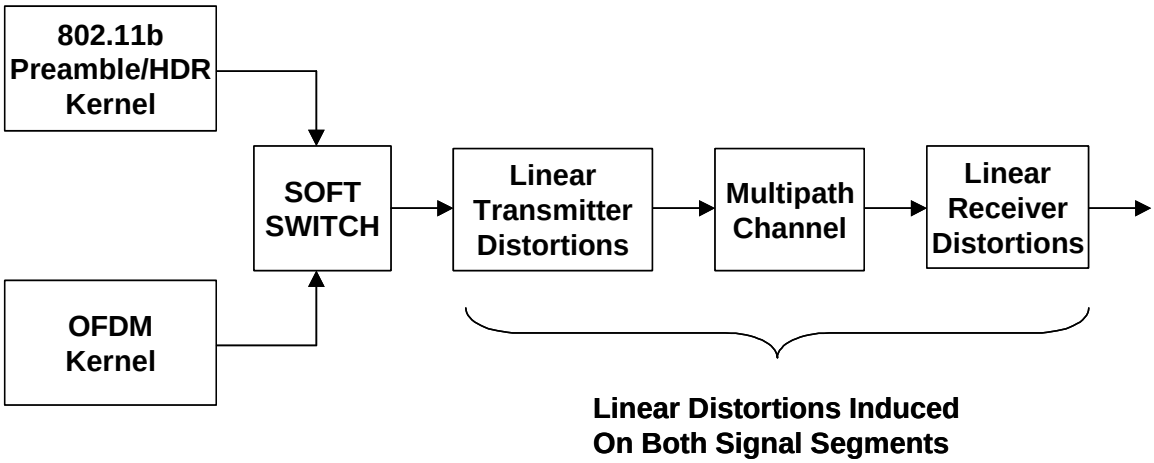

Figure A.1.1-1 Linear distortions common to the single-carrier and multi-carrier signal segments.

In short, this common linear distortion requirement states that the dominant filters in the transmit radio will stay invariant and common to all waveform segments. Once the receiver has determined the end-to-end impulse response, channel information is assumed to be common to both the single-carrier signal and the multi-carrier signal. This will enable receiver design of linear-distortion mitigation techniques that do not require a reacquisition after transitioning to OFDM.

An example transmit radio analog component effected by this requirement is a surface acoustic wave (SAW) filter as depicted in Figure A.1.1-2. This filter may possess receiver-discernable amplitude ripple in the passband of the signal. Consequently, this filter must be used on both the single-carrier and multi-carrier packet segments if it is a dominant distortion mechanism.

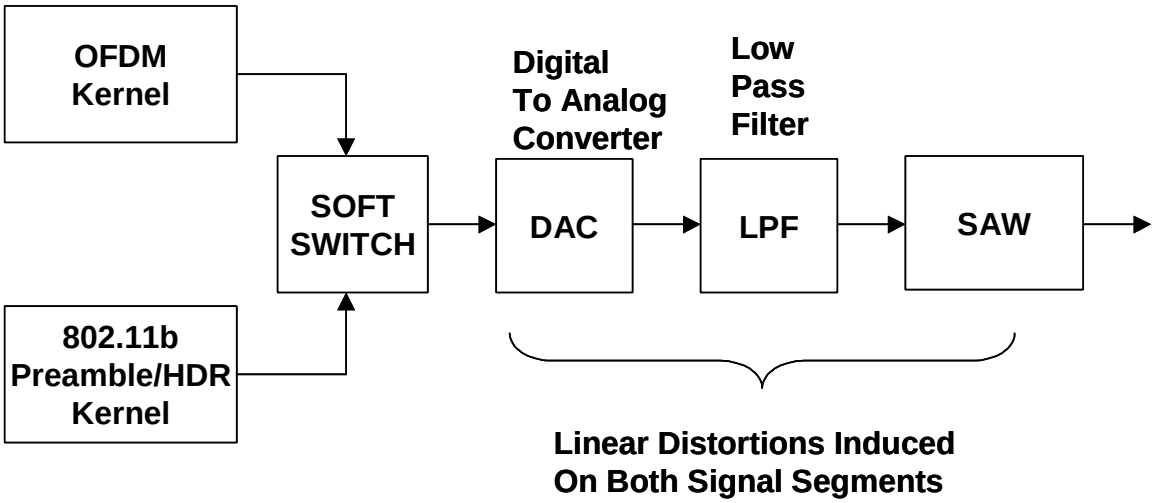

Figure A.1.1-2 Example linear distortions in the transmit radio common to the waveform segments.

AA.1.2 Symbol Shaping Unique to the OFDM Segment

OFDM spectral shaping can be achieved using two mechanisms. One, time-domain convolution filtering can be used to shape the spectrum. Two, time-domain window tapering of OFDM symbol onset and termination can be used to shape the spectrum. This second mechanism can be viewed as frequency domain convolution. The first mechanism must be common to both the OFDM and single-carrier if it is a dominant distortion mechanism. The second mechanism can be unique to the OFDM segment, since it does not affect the frequency response of the 52 sub-carriers.

The first spectral shaping mechanism using time-domain convolution filtering must be relatively common to both the single-carrier and multi-carrier segments for the reasons described in the preceding section. The receiver must not see intra-packet frequency response discontinuities that are not coherent.

Relatively common means that the designer has implementation options. Convolution filtering can be budgeted in various ways. One option would be to use a single filter which both the single-carrier and multi-carrier segments use. Another option would be to use two different physical filter realizations, one for the single-carrier segment and a second for the multi-carrier segment, say for reason of distinct sample rates or bit precision. With this second implementation option, the designer must ensure the frequency response of the filter is common to both packet segments.

The second shaping mechanism, which uses frequency-domain convolution through time-domain sub-carrier onset-and-termination shaping, can be unique to the OFDM segment. This unique technique is acceptable because it does not modify the required frequency response of the 52 sub-carriers.

Spectral shaping by tapering the OFDM symbol onset-and-termination using a time-domain window is described in the 802.11a standard and is equally germane to 802.11g systems. For convenience, one of the relevant figures from the 802.11a standard is repeated here as Figure A.1.2-1. The 802.11a suggested tapering transition duration is 0.1 usecs.

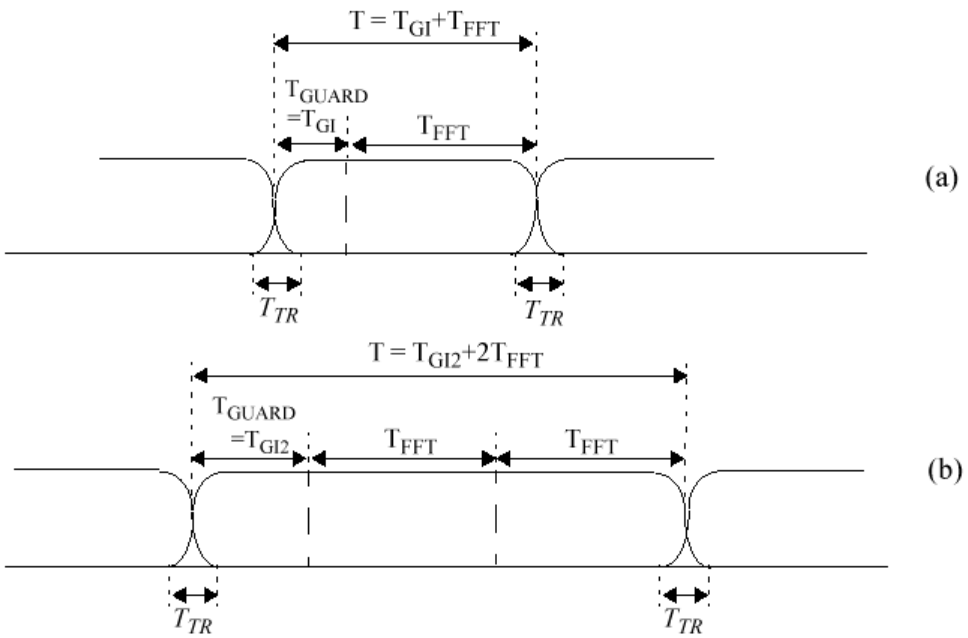

Figure A.1.2-1 Spectral shaping achieved by OFDM symbol onset and termination shaping.

The effect of time-domain windowing on a single sub-carrier's power spectrum is shown in Figure A.1.2-2 for two cases. The first case is rectangular time-domain windowing of an OFDM symbol. The second case is for the 802.11a suggested time-domain windowing of an OFDM symbol with a 0.1 usec transition. Note the difference in frequency dependent amplitude roll-off. Adding the 52 frequency-bin-centered individual sub-carrier power spectral densities generates the composite 52 sub-carrier power-spectrum.

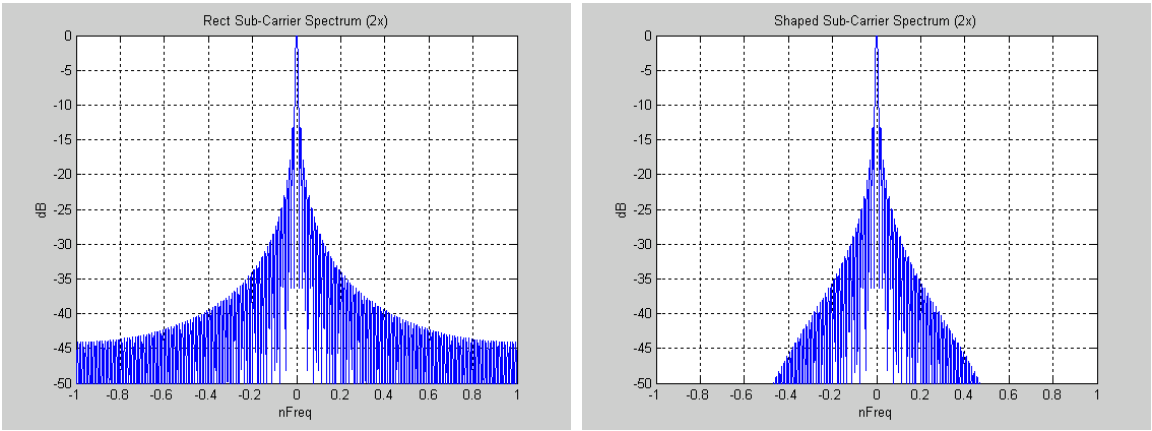

Figure A.1.2-2 Sub-carrier spectrum for rectangular windowing and 802.11a suggested windowing.

This type of OFDM spectrum control does not affect the relative amplitudes and phases of the individual sub-carriers. Instead it affects each sub-carrier's power spectral density. Consequently, this type of spectrum control

has a benign effect on the relative spectrums of single-carrier and the multi-carrier packet segments. That is why it can be unique.

To achieve the design goal, the implementer can budget spectral shaping in the transmit radio. Some of the spectral shaping can be achieved using time-domain convolution filtering and some may be achieved through time-domain windowing of the OFDM. In any case the transmit implementation must provide frequency response coherency.

AA.1.3 Pulse Shaping Unique to the Single Carrier Segment

This section describes the pulse shaping requirements of the single-carrier packet segment. To establish frequency response coherency, it is necessary to specify the frequency response of the single-carrier signal. The way to do this is to mandate the use of a particular pulse shape by all transmitters. The frequency response of this pulse shape establishes a coherent relationship to the frequency response of the OFDM.

The frequency response of the single-carrier pulse is patterned after the tandem OFDM. The pattern is the OFDM signal as described in the 802.11a standard, with an example provided in 802.11a Annex G. The ideal OFDM signal has a flat amplitude response and zero-phase offset across 52 sub-carriers. The 802.11a standard establishes the ideal frequency-response relationship between the 12 short SYN sub-carriers, 52 long SYNC sub-carriers, the 52 SIGNAL field sub-carriers and the 52 data field sub-carriers. Similarly, the ideal relationship to the single-carrier frequency response is defined.

Relative to the ideal OFDM, the single-carrier signal will have the pulse shape established herein. In a particular implementation, it is acceptable to deviate from this ideal but only in a manner that is common to both the single-carrier signal and the multi-carrier signal across the passband of the OFDM signal. This provides the required frequency response coherency.

The specified single-carrier pulse has several nice features. The pulse is continuous in time so that it can be described independent of digital implementation. The pulse is defined with an equation, so designers can generate their own copy without loss in precision. The pulse duration is small, so digital FIR implementation generates a small number of taps without loss of precision. The bandwidth of the pulse is constrained, so a convenient range of sample rates adequately satisfies the Nyquist criteria. This enables a range of sample-rate implementation options. The pulse can be used to design multi-rate filters without loss of precision. The pulse has a distinct single-peak time-domain shape that provides easy acquisition by legacy 802.11b systems.

The frequency response of the single-carrier pulse is patterned after the tandem OFDM. The single-carrier pulse is derived from a time-windowed sinc function as shown in Figure A.1.3-1. The sinc function is the time response of an ideal brickwall filter. The brickwall filter is set equal to the bandwidth of an ideal OFDM signal. In particular, the bandwidth of the brickwall filter has been set to 52 times the 802.11a sub-carrier spacing of 20/64 MHz, or 312.5 KHz.

$$h_{IdealBW}(t) = f_W \frac{\sin(\pi f_W t)}{\pi f_W t} = f_W \mathrm{sinc}(f_W t) \quad , \text{ where } f_W = 52(20/64) \text{ MHz}$$

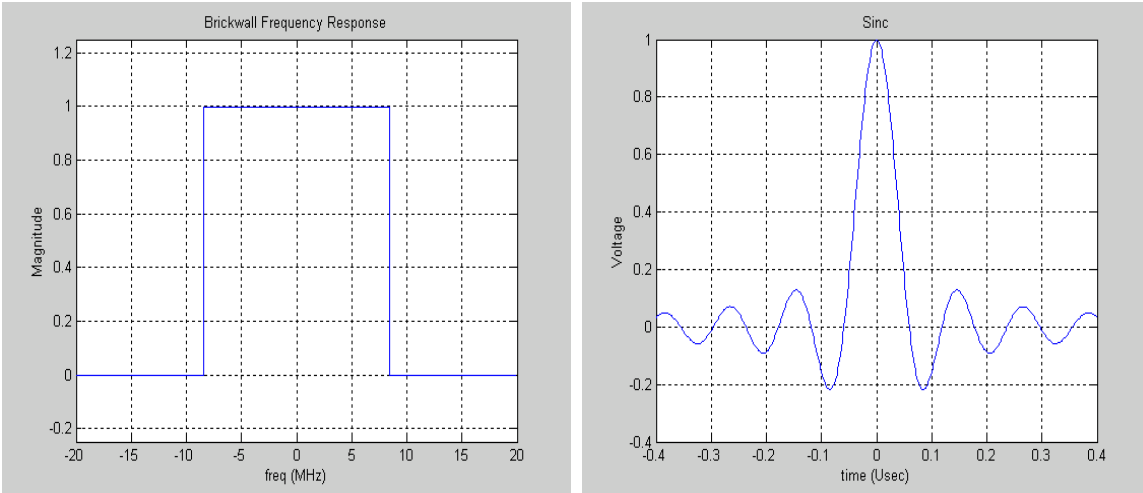

Figure A.1.3-1 The foundational brickwall filter.

The infinite duration impulse response of the brickwall filter must be windowed to something practical. A continuous time version of the Hanning window was used. The Hanning window and an overlay of the sinc function are shown in Figure A.1.3-2.

$$h_{Window}(t) = 0.5\left[1+\cos\left(2\pi\frac{t}{T_{SPAN}}\right)\right] \text{ , where } T_{SPAN} = 0.8 \text{ usecs}$$

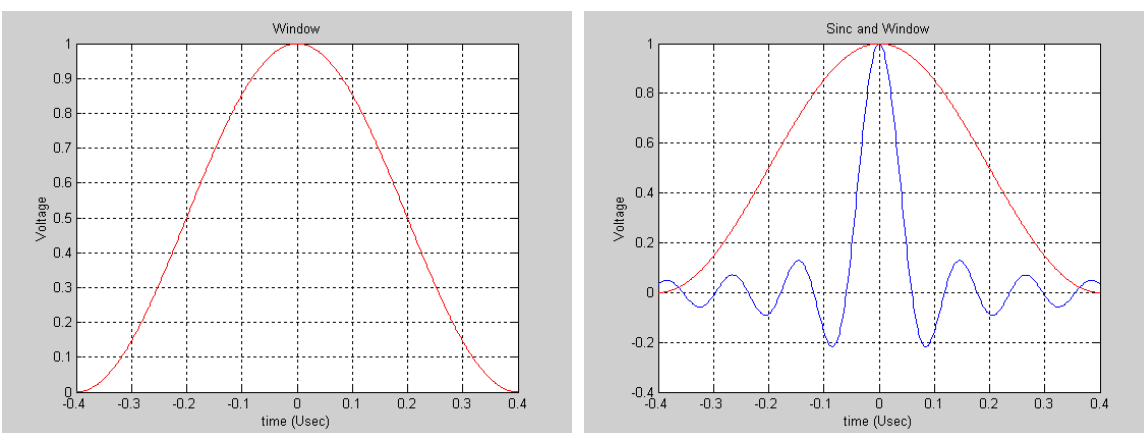

Figure A.1.3-2 The continuous time Hanning window.

The pulse specified for use with the single-carrier packet segment is obtained by application of the window as shown in Figure A.1.3-3. Notice that its duration is equal to an 802.11a short sync cycle, only 0.8 usecs.

$$p(t) = h_{Window}(t)\,h_{IdealBW}(t)$$

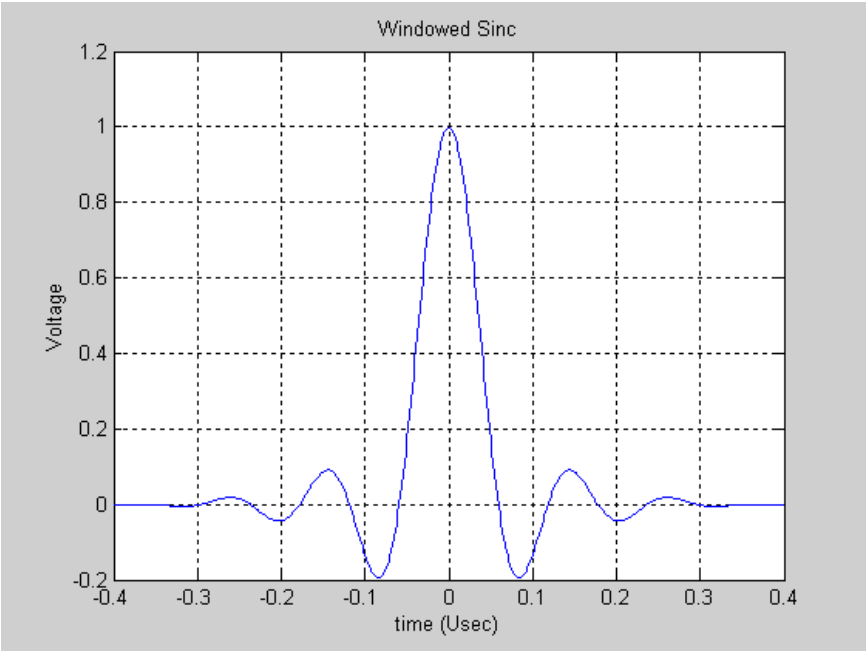

Figure A.1.3-3 The specified pulse.

The frequency response of the derived pulse is shown in Figure A.1.3-4. This pulse generates a single-carrier signal that has a spectrum nearly equal to that of the OFDM signal. This means that the receiver will experience essentially no change in receive signal power behavior even in the presence of multipath. At the point of the outer most sub-carrier in the OFDM signal, the single-carrier spectrum is down only about 4 dB. This is deemed adequate because the single-carrier preamble-header is long in duration compared to the 802.11a sync. Plenty of time is available to generate CIR information that is sufficiently accurate.

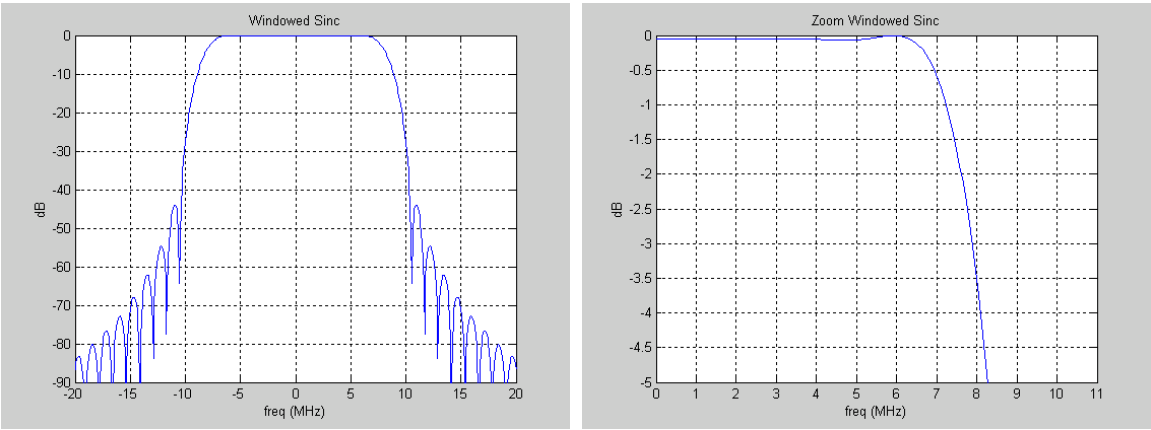

Figure A.1.3-4 The single-carrier frequency response.

In summary, the specified single-carrier pulse provides frequency response coherency between the single-carrier and multi-carrier segments of the packet. This does not mean that the spectrums are identical between segments. Rather, it means the ideal frequency responses of both are known. Beyond this, all linear distortion is common to both. It is not necessary to use this single-carrier pulse during 802.11b packet transmissions.

AA.2 Sample-Power Matching Requirement

The transmit signal power shall be equal for the single-carrier and multi-carrier signal segments. The point of comparison is shown in Figure A.2-1.

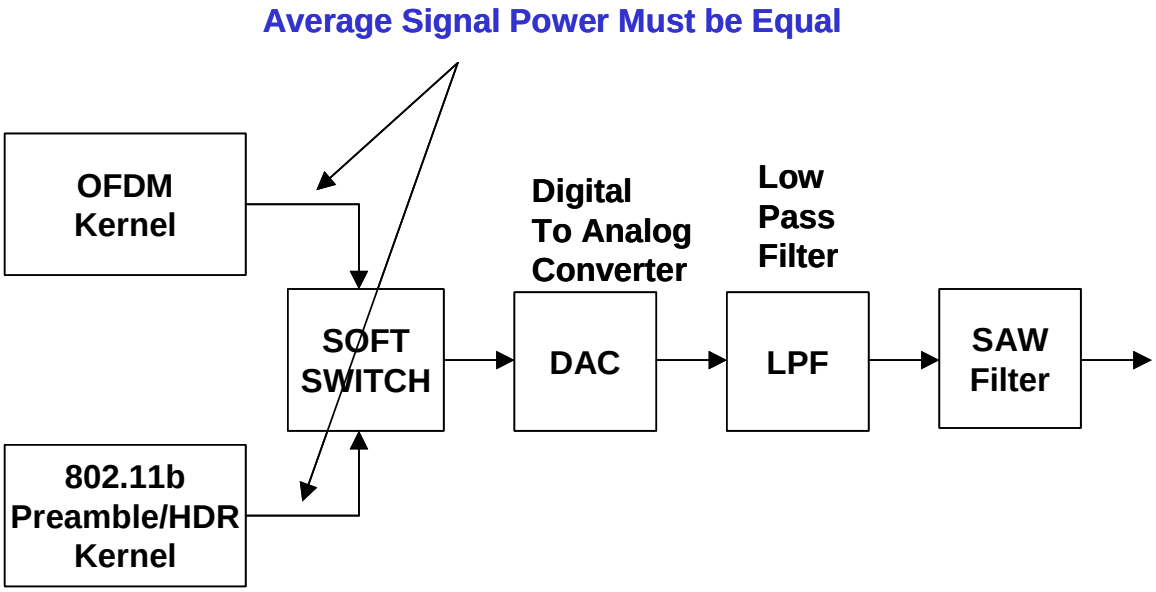

Figure A.2-1 Comparing signal power.

AA.3 Transition Time Alignment

This section describes how the single-carrier signal and multi-carrier signal are time aligned. The single-carrier signal uses a chip rate of 11 MHz. The OFDM signal uses a kernel sample rate of 20 MHz. The signals are easily aligned by first aligning the 11 MHz clock and the 20 MHz clock on 1-usec boundaries as shown in Figure A.3-1.

The 11 Barker chips of the preamble and header are transmitted aligned with this timing epoch. The first Barker chip is transmitted synchronous to the epoch, then the remaining 10 chips follow. This repeated over the during of the preamble and header.

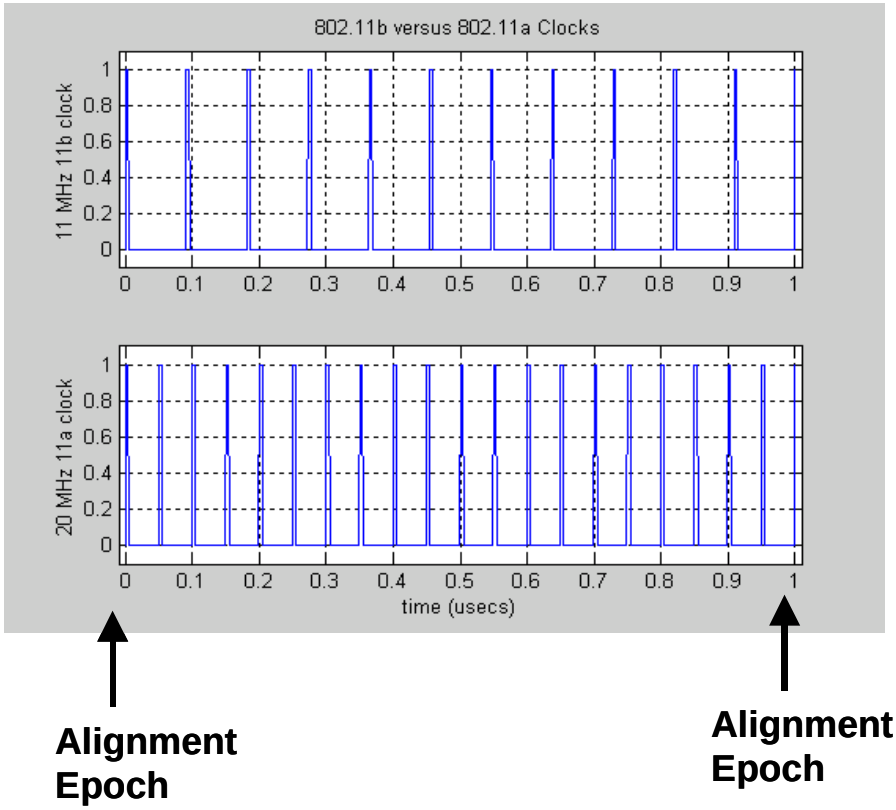

Figure A.3-1 Aligning the 11 MHz and 20 MHz clock.

The peak of the continuous-time single-carrier pulse shall be aligned to this epoch as shown in Figure A.3-2.

The first full strength OFDM sample is sent on the 1-usec-epoch boundary as illustrated in Figure A.3-2. Tapering can precede this. The peak corresponds to the first full-strength sample described in 802.11a Annex G.

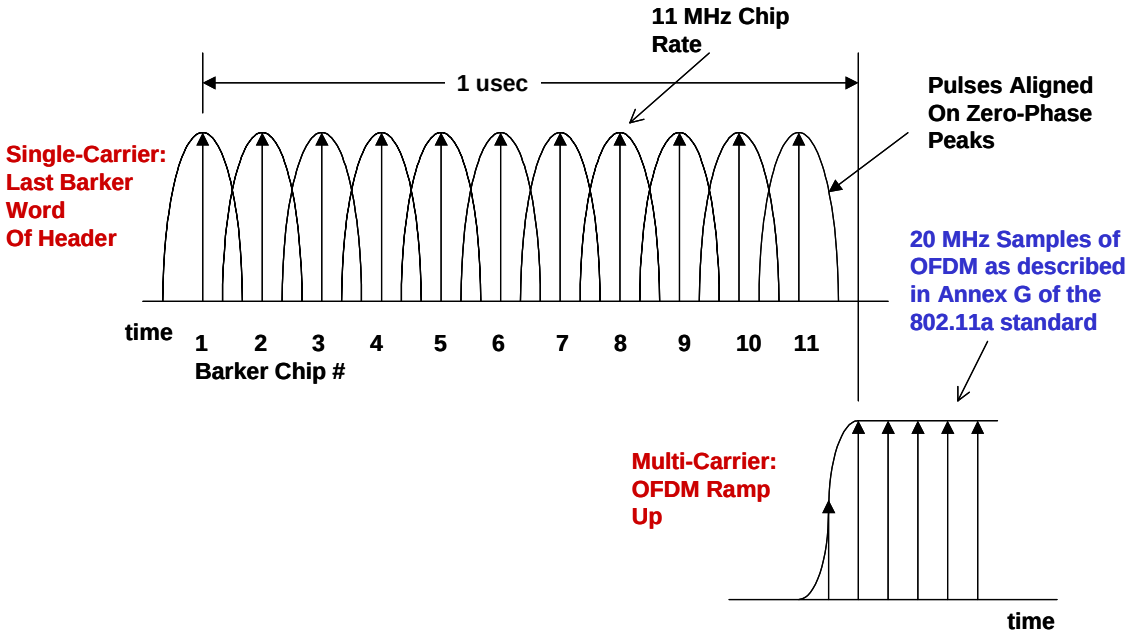

Figure A.3-2 Single-carrier to OFDM time alignment.

AA.4 Single-Carrier Termination Requirement

The single carrier segment of a packet shall terminate in nominally 100 nsecs with the same type shaping described for 802.11a. This is depicted in Figure A.4-1. It is not necessary to completely flush the single-carrier pulse-shaping filter. This minimizes the transition time overhead.

This termination can be performed explicitly in the baseband processor or it may be provided by filters in the transmit radio.

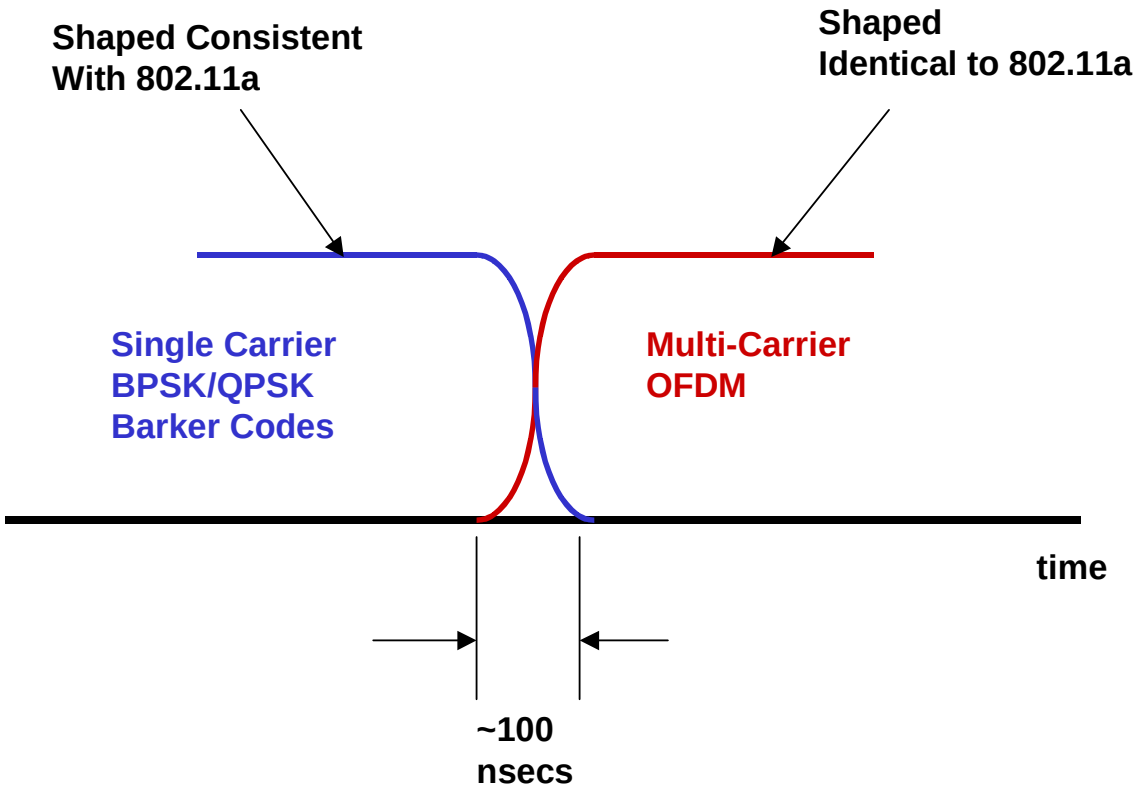

Figure A.4-1 Single-carrier termination requirement.

AA.5 Transition Carrier Frequency Requirement

The carrier frequency shall be coherent across the packet segments. This effect is depicted in Figure A.5-1.

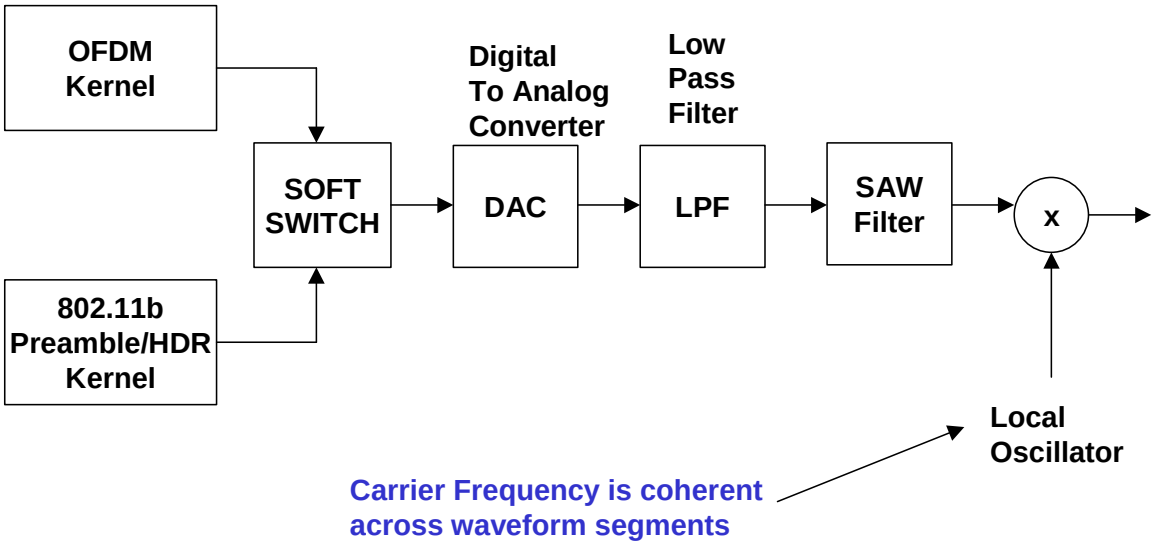

Figure A.5-1 Carrier frequency coherency shall be maintained.

AA.6 Transition Carrier Phase Requirement

The carrier phase shall be coherent across the single-carrier to multi-carrier transition. This coherency shall be differentially established relative to the phase of the last Barker word transmitted (the last 11 single-carrier chips). The OFDM as described in 802.11a shall be transmitted with one of 4 phase offsets: 0, 90, 180 or 270 degrees, depending upon the phase of the last Barker word. The phase of the OFDM shall be 45 degrees less than the phase of the last Barker word.

In a transmit implementation using I/Q signaling, it is common to maximally energize in the I-and-Q channels concurrently for BPSK or QPSK signaling. The analog stages of the transmit radio tend to perform best with this configuration. To achieve this effect, typically the BPSK or QPSK I-and-Q alignment of the Barker words are at 45 degrees, 135 degrees, -135 degrees and -45 degrees as shown in Figure A.6-1. This Barker word alignment is used to establish the phase of the OFDM signal.

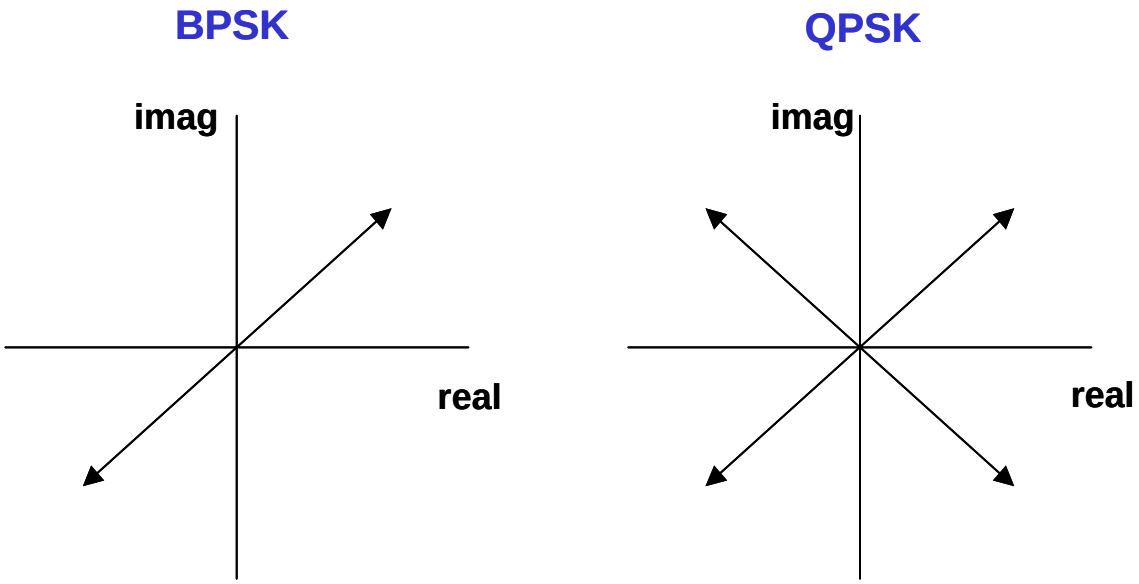

Figure A.6-1 BPSK and QPSK signaling with the I/Q channels maximally energized.

Figure A.6-2 is a series of diagrams illustrating the phase relationship between the last Barker word, not the last chip, in the 802.11g header and subsequent OFDM symbols. For example, if the phase of the last Barker word is in the first quadrant at 45 degrees, then the phase of the OFDM symbols will be transmitted as described in Annex G of the 802.11a standard unmodified. However, if the phase of the last Barker word is in the second quadrant (135 degree phase) then the phase of the OFDM symbols will be rotated by +90 degrees relative to the phase of the samples in 802.11a Annex G. If the phase of the last Barker word is in the third quadrant (-135 degree phase) then the phase of the OFDM symbols will be rotated by +180 degrees relative to the phase of the samples in 802.11a Annex G. If the phase of the last Barker word is in the fourth quadrant (-45 degree phase) then the phase of the OFDM symbols will be rotated by +270 degrees relative to the phase of the samples in 802.11a Annex G.

If the transmitter generates the Barker words at some other angular relationship to the I/Q axes, then the OFDM will be transmitted at a phase 45 degrees less than the phase of the last 11-chip Barker word.

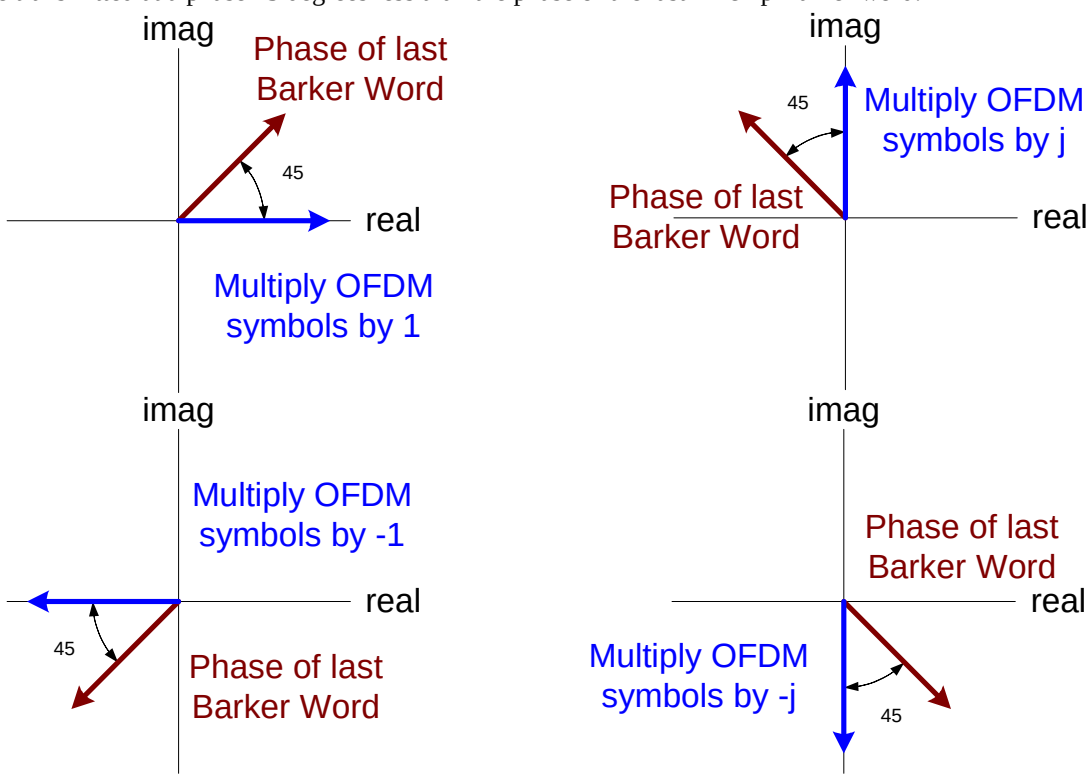

Figure A.6-2 The phase of the OFDM is established by the last Barker word.

AA.7 Accuracy Requirement

The preceding sections establish signal requirements without mention of required accuracy. This section now establishes the associated accuracies. The accuracy is set in harmony with the 802.11a specification.

The required accuracy for a given transmit packet is data rate dependent. The packet accuracy is set by the data rate of the OFDM portion of the packet. The preamble and header will be transmitted with the same fidelity requirement as the fidelity requirement levied on the OFDM portion of the packet. The accuracy is shown in the following table, which is a copy of the error vector magnitude (EVM) specification set by 802.11a. For the single-carrier portion of the packet, the EVM is interpreted as normalized mean-squared error (NMSE).

Data Rate Mbps	EVM Spec
6	-5
9	-8
12	-10
18	-13
24	-16
36	-19
48	-22
54	-25

Figure A.7-1 shows how the fidelity of the single-carrier portion of the packet can be measured. This document describes the ideal transmitter characteristic. An implementation is evaluated relative to this ideal. The mean squared error between an actual implementation and the ideal transmitter can be computed. The quantity is normalized by the ideal transmit signal power. The NMSE fidelity shall be no worse than the limits set by the EVM specification for 802.11a. When making the measurement, the linear distortions common to both the single-carrier and multi-carrier can be backed out. In addition, other alignments can be made that do not change the intent of this section.

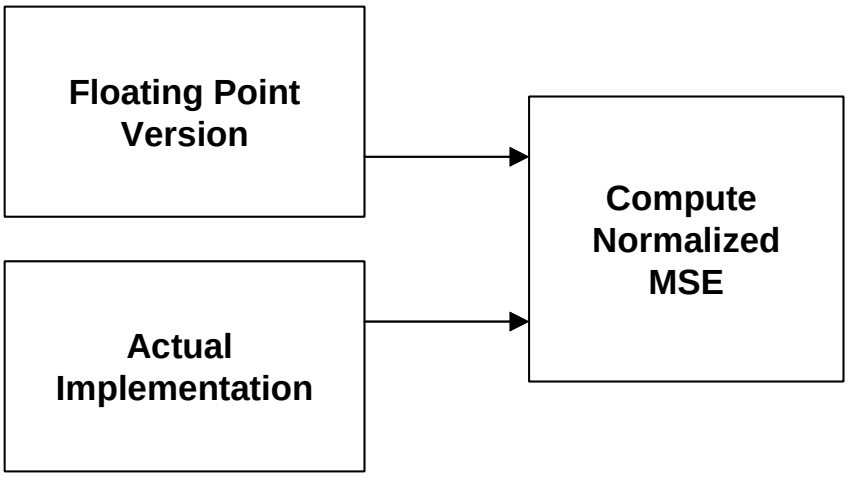

MEASURE MSE AFTER THE FOLLOWING:

- **Best-fit time alignment**
- **Best-fit gain alignment**
- **Best-fit phase alignment.**
- **Back-out linear distortion common to OFDM, if desired.**

Figure A.7-1 Measuring single-carrier fidelity using normalized mean-squared error.

AA.8 Locked Oscillator Requirement

The oscillator driving the sample rate and the carrier frequency shall be derived off a common reference. This will allow the timing recovery to be derived using information from the carrier recovery loop.

Appendix G: PBCC-22 and PBCC-33 Optional Mode

G.2 High Rate PLCP sublayer

G.2.1 Overview

This subclause provides a convergence procedure for the 2, 5.5, 11 and 22 Mbit/s specification in which PSDUs are converted to and from PPDUs. During transmission, the PSDU shall be appended to a PLCP preamble and header to create the PPDU. Two different mandatory supported preambles and headers are defined: the long preamble and header which interoperates with the 1 and 2 Mbit/s DSSS specification as described in IEEE Std 802.11-1999, and the short preamble and header as described in IEEE Std 802.11b-1999. At the receiver, the PLCP preamble and header are processed to aid in demodulation and delivery of the PSDU.

The short preamble and header is intended for applications where maximum throughput is desired and interoperability with legacy and non-short preamble capable equipment is not a consideration. That is, it is expected to be used only in networks of like equipment that can all handle the mode.

G.2.3.3 Long PLCP Signal (SIGNAL) field

The 8-bit signal field indicates to the PHY the modulation that shall be used for transmission (and reception) of the PSDU. The High Performance PHY supports five mandatory rates given by the following 8 bit words where the lsb shall be transmitted first in time:

a) X’0A’ (msb to lsb) for 1 Mbit/s
b) X’14’ (msb to lsb) for 2 Mbit/s
c) X’37’ (msb to lsb) for 5.5 Mbit/s
d) X’6E’ (msb to lsb) for 11 Mbit/s
e) X’DC’ (msb to lsb) for 22 Mbit/s
f) X’21’ (msb to lsb) for 33 Mbit/s

The High Performance PHY rate change capability is described in G.2.3.14. This field shall be protected by the CCITT CRC-16 frame check sequence described in G.2.3.6.

G.2.3.4 Long PLCP SERVICE (SERVICE) field

Six bits have been defined in the SERVICE field to support the high performance extension. The three right most bits (bits 5, 6 and 7) shall be used to supplement the LENGTH field described in G.2.3.5. Bit 3 shall be used to indicate whether the modulation method is CCK <0> or PBCC <1> as shown in Table 1. Bit 2 is used to indicate that the transmit frequency and symbol clocks are derived from the same oscillator. For an 802.11g-compliant device, this Locked Clocks bit shall be set to 1. The bit b0 if set to 1 indicates the modulation mode is CCK-OFDM. The SERVICE field shall be transmitted b0 first in time and shall be protected by the CCITT CRC-16 frame check sequence described in G.2.3.6. An IEEE802.11 compliant device shall set the values of the bits b0, b1, b4, and b5 to 0.

Table 1. SERVICE field definitions

b0	b1	B2	b3	b4	b5	b6	b7
CCK-OFDM Bit	Reserved	Locked Clocks Bit 0 = not	Mod. Selection Bit 0 = CCK	Reserved	Length Extension Bit 0	Length Extension Bit 1	Length Extension Bit 2

		1 = locked	1 = PBCC				

G.2.3.5 Long PLCP Length (LENGTH) field

The PLCP length field shall be an unsigned 16 bit integer which indicates the number of microseconds required to transmit the PSDU. The transmitted value shall be determined from the LENGTH and DataRate parameters in the TXVECTOR issued with the PHY-TXSTART.request primitive described in subclause G.4.4.2.

The length field provided in the TXVECTOR is in octets and is converted to microseconds for inclusion in the PLCP LENGTH field. The LENGTH field is calculated as follows: Since there is an ambiguity in the number of octets that is described by a length in integer microseconds for any data rate over 8 Mbit/s, Length Extension bits shall be placed at bit positions b6 and b7 in the SERVICE field to indicate when the smaller potential number of octets is correct. For all modes other than 22 Mbit/s PBCC, Length Extension bit 1, in bit position b6, shall be 0.

c) 22 Mbit/s PBCC Length = (number of octets + 1)*4/11, rounded up to the next integer; the service field b6 and b7 bits shall each indicate a ‘0’ if the rounding took less than 4/11; the service field bit b6 shall indicate a ‘1’ and the service field bit ‘b7’ shall indicate a ‘0’ if the rounding took more than or equal to 4/11 and less than 8/11; and the service field bit b6 shall indicate a ‘1’ and the service field bit ‘b7’ shall indicate a ‘0’ if the rounding took more than or equal to 8/11.

d) 33 Mbit/s PBCC Length = (number of octets + 1)*8/33, rounded up to the next integer; the service field b5, b6, and b7 bits shall each indicate a ‘0’ if the rounding took less than 8/33; the service field bit b5 shall indicate a ‘0’, b6 shall indicate a ‘0’ and the service field bit ‘b7’ shall indicate a ‘1’ if the rounding took more than or equal to 8/33 and less than 16/33; the service field bit b5 shall indicate ‘0’, b6 shall indicate a ‘1’ and ‘b7’ shall indicate a ‘0’ if the rounding took more than or equal to 16/33 and less than 24/33; the service field bit b5 shall indicate ‘0’, b6 shall indicate a ‘1’ and ‘b7’ shall indicate a ‘1’ if the rounding took more than or equal to 24/33 and less than 32/33; the service field bit b5 shall indicate ‘1’, b6 shall indicate a ‘0’ and ‘b7’ shall indicate a ‘0’ if the rounding took more than or equal to 32/33.

At the receiver, the number of octets in the MPDU is calculated as follows:

d) 22 Mbit/s PBCC number of octets = (Length * 11/4) –1, rounded down to the next integer, minus 1 if the service field bit b6 is a ‘0’ and the service field bit b7 is a ‘1’, or minus 2 if the service field bit b6 is a ‘1’ and the service field bit ‘b7’ is a ‘0’.

e) 33 Mbit/s PBCC number of octets = (Length * 33/8) –1, rounded down to the next integer, minus 1 if the service field bit b5 is a ‘0’, b6 is a ‘0’, and the service field bit b7 is a ‘1’, or minus 2 if the service field bit b5 is a ‘0’, b6 is a ‘1’, and the service field bit ‘b7’ is a ‘0’, or minus 3 if the service field bit b5 is a ‘0’, b6 is a ‘1’, and the service field bit ‘b7’ is a ‘1’, or minus 4 if the service field bit b5 is a ‘1’, b6 is a ‘0’, and the service field bit ‘b7’ is a ‘0’

Table 3 shows an example calculation for several packet lengths of PBCC at 22 Mbit/s:

Table 3- Example of LENGTH calculations for PBCC-22

TX Octets	(Octets+ 1) * 4/11	LENGTH	Length Extension bit 1	Length Extension bit 2	LENGTH *11/4	floor(X)	RX Octets
1023	372.364	373	0	1	1025.75	1025	1023
1024	372.727	373	0	0	1025.75	1025	1024
1025	373.091	374	1	0	1028.50	1028	1025
1026	373.455	374	0	1	1028.50	1028	1026

The lsb (least significant bit) shall be transmitted first in time. This field shall be protected by the CCITT CRC-16 frame check sequence described in subclause G.2.3.6.

G.2.3.10 Short PLCP SIGNAL Field (shortSignal)
The 8 bit SIGNAL Field of the short header indicates to the PHY the data rate which shall be used for transmission (and reception) of the PSDU. A PHY operating with a HP/DSSS/short preamble supports four mandatory rates given by the following 8 bit words, where the lsb shall be transmitted first in time and the number represents the rate in units of 100 kBit/s:

a) X'14'(msb to lsb) for 2 Mbit/s
b) X'37'(msb to lsb) for 5.5 Mbit/s
c) X'6E'(msb to lsb) for 11 Mbit/s
d) X'DC'(msb to lsb) for 22 Mbit/s
e) X'21'(msb to lsb) for 33 Mbit/s

G.2.3.11 Short PLCP SERVICE Field (shortService)
The SERVICE field in the short header shall be the same as the SERVICE field described in subclause G.2.3.4.
G.2.3.12 Short PLCP Length Field (shortLENGTH)
The LENGTH field in the short header shall be the same as the LENGTH field described in subclause G.2.3.5
A typical state machine implementation of the PLCP receive procedure is provided in Figure 10.

G.3 High Performance physical layer management entity (PLME)
G.3.2 High Performance PHY MIB
All High Performance PHY MIB attributes are defined in Annex D of IEEE Std 802.11-1999, with specific values defined in Table 4.

Table 4 — MIB Attribute Default Values / Ranges

Managed Object	Default value / range	Operational semantics
dot11PhyOperationTable	High Performance – 2.4(X'05')	Static
dot11PHYType	Implementation Dependent	Static
dot11TempType	Implementation Dependent	Static
dot11CurrentRegDomain	Implementation Dependent	Static
dot11ChannelAgilityPresent	Implementation Dependent	Static
dot11ChannelAgilityEnabled	False / Boolean	Dynamic
dot11PhyAntennaTable		
dot11CurrentTxAntenna	Implementation Dependent	Dynamic
dot11DiversitySupport	Implementation Dependent	Static
dot11CurrentRxAntenna	Implementation Dependent	Dynamic
dot11PhyTxPowerTable		
dot11NumberSupportedPowerLevels	Implementation Dependent	Static
dot11TxPowerLevel1	Implementation Dependent	Static
dot11TxPowerLevel2	Implementation Dependent	Static
dot11TxPowerLevel3	Implementation Dependent	Static
dot11TxPowerLevel4	Implementation Dependent	Static
dot11TxPowerLevel5	Implementation Dependent	Static
dot11TxPowerLevel6	Implementation Dependent	Static
dot11TxPowerLevel7	Implementation Dependent	Static
dot11TxPowerLevel8	Implementation Dependent	Static

dot11CurrentTxPowerLevel	Implementation Dependent	Dynamic
dot11PhyDSSSTable		
dot11CurrentChannel	Implementation Dependent	Dynamic
dot11CCAModeSupported	Implementation Dependent	Static
dot11CurrentCCAMode	Implementation Dependent	Dynamic
dot11EDThreshold	Implementation Dependent	Dynamic
dot11AntennaeListTable		
dot11SupportTxAntenna	Implementation Dependent	Static
dot11SupportRxAntenna	Implementation Dependent	Static
dot11RegDomainsSupportedTable		
dot11RegDomainsSupported	Implementation Dependent	Static
dot11SupportedDataRatesTx	Table Tx X’02’, X’04’, X’0B’, X’16’, X’2C’	Static
dot11SupportedDataRatesRx	Table Rx X’02’, X’04’, X’0B’, X’16’, X’2C’	Static
NOTE — The column titled “Operational semantics” contains two types: static and dynamic. Status MIB attributes are fixed and cannot be modified for a given PHY implementation. MIB attributes defined as dynamic can be modified by some management entities.		

G.3.4 High Rate TXTIME calculation

The value of the TXTIME parameter returned by the PLME-TXTIME.confirm primitive shall be calculated according to the following equation:

For PBCC22 Mbps

TXTIME = PreambleLength + PLCPHeaderTime + Ceiling(((LENGTH+PBCC) x 8) / DATARATE)

For PBCC33 Mbps

TXTIME = PreambleLength + PLCPHeaderTime + Ceiling(((LENGTH+PBCC) x 8) / DAT-ARATE) + ClkSwitchTime.

Where LENGTH and DATARATE are values from the TXVECTOR parameter of the corresponding PLME-TXTIME. request primitive. PBCC has a value of 1 if the SIGNAL value from the TXVECTOR parameter specifies PBCC and has a value of 0 otherwise. The value of PreambleLength is 144 microseconds if the TXPREAMBLE_TYPE value from the TXVECTOR parameter indicates "LONGPREAMBLE" or 72 microseconds if the TXPREAMBLE_TYPE value from the TXVECTOR parameter indicates "SHORTPREAM-BLE". The value of PLCPHeaderTime is 48 microseconds if the TXPREAMBLE_TYPE value from the TXVECTOR parameter indicates "LONGPREAMBLE" or 24 microseconds if the TXPREAMBLE_TYPE value from the TXVECTOR parameter indicates "SHORTPREAMBLE". LENGTH is in units of octets. DATARATE is in units of Mbit/s. ClkSwitchTime is defined as 1 us. Ceiling is a function which returns the smallest integer value greater than or equal to its argument value.

G.4 High Performance PMD sublayer

G.4.5.1.2 Semantics of the service primitive

The primitive provides the following parameters:

Parameter	Associated primitive	Value	Description
TXD_UNIT	PMD_DATA.request	0,1: 1 Mbit/s 00, 01, 11, 10: 2 Mbit/s X’0’- X’F’:5.5 Mbit/s X’00’ - X’FF’: >=	This parameter represents a single block of data, which, in turn, is used by

		11Mbit/s	the PMD to be differentially encoded into a transmitted symbol. The symbol itself is spread by the PN code prior to transmission.

G.4.5.2.2 Semantics of the service primitive
The primitive provides the following parameters:

Parameter	Associated primitive	Value	Description
RXD_UNIT	PMD_DATA.indicate	0,1: 1 Mbit/s 00, 01, 11, 10: 2 Mbit/s X'0'- X'F': 5.5 Mbit/s X'00' - X'FF': >= 11 Mbit/s	This parameter represents a single symbol that has been demodulated by the PMD entity.

G.4.5.3.2 Semantics of the service primitive
The primitive provides the following parameters:

Parameter	Associated primitive	Value	Description
MODULATION	PMD_MODULATION.request PMD_MODULATION.indicate	1 Mb Barker, 2 Mb Barker, 5.5 CCK, 11 CCK, 5.5 PBCC, 11 PBCC, 22 PBCC, 33 PBCC	In Receive mode, the MODULATION parameter informs the PLCP layer which of the PHY data modulations was used to process the PSDU portion of the PPDU. Subclause G.4.6.3 provides further information on the High Performance PHY modulation codes.

G.4.5.10.2 Semantics of the service primitive
The primitive provides the following parameters:

RATE	PMD_RATE.indicate PMD_RATE.request	X'0A' for 1 Mbit/s X'14' for 2 Mbit/s X'37' for 5.5 Mbit/s X'6E' for 11 Mbit/s X'DC' for 22 Mbit/s X'21' for 33 Mbit/s	RATE selects which of the High Performance PHY data rates is used for PSDU transmission. Subclause G.4.6.3 provides further information on the High Performance PHY data

			rates. The High Performance PHY rate change capability is fully described in G.2

G.4.6.3 Modulation and channel data rates
Ten optional modulation formats and data rates are specified for the High Performance PHY. The high rate access rate shall be based on the Packet Binary Convolutional Coding (PBCC) 22, and 33 Mbit/s and/or CCK-OFDM modulations at 6, 9, 12, 18, 24, 36, 48, 54 Mbit/s.

G.4.6.7 PBCC-22/33 Data Modulation and Modulation Rates

This coding scheme uses a 256-state binary convolutional code of rate 2/3 and a cover sequence. The output of the BCC is encoded jointly onto the I and Q channels as further documented below.

In the encoder for this scheme, incoming data is first encoded with a binary convolutional code. A cover code (as defined in PBCC modes in 802.11b) is applied to the encoded data prior to transmission through the channel.

The binary convolutional code that is used is a 256-state, rate 2/3 code. The generator matrix for the code is given as

$$\mathbf{G} = \begin{bmatrix} 1 + D^4 & D & D + D^3 \\ D^3 & 1 + D^2 + D^4 & D + D^3 \end{bmatrix}.$$

In octal notation, the generator matrix is given by

$$G = \begin{bmatrix} 21 & 2 & 12 \\ 10 & 25 & 12 \end{bmatrix}.$$

Since the system is frame (PPDU) based, the encoder shall be in state zero, i.e., all memory elements contain zero, at the beginning of every PPDU. The encoder must also be placed in a known state at the end of every PPDU to prevent the data bits near the end of the PPDU. This is achieved by appending one octet containing all zeros to the end of the PPDU prior to transmission and discarding the final octet of each received PPDU.

An encoder block diagram is shown in Figure 15. It consists of four memory elements. For every pair of data bits input, three output bits are generated. The output of the convolutional code is mapped to an 8-PSK constellation; each triple of output bits from the binary convolutional code is used to produce one symbol. This yields a throughput of two information bits per symbol.

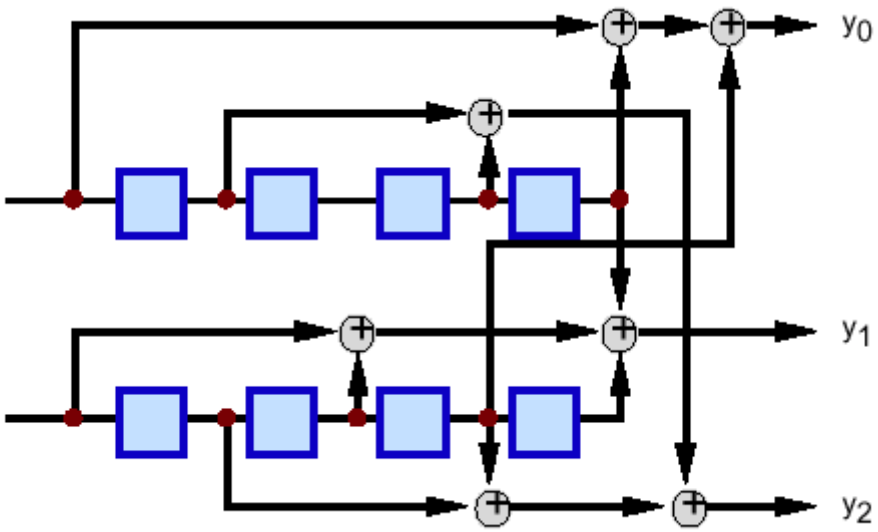

Figure 15. PBCC-22 Convolutional Encoder

The phase of the first complex chip of the PSDU shall be defined with respect to the phase of the last chip of the PCLP header, i.e., the last chip of the CRC check. The bits (y2 y1 y0) = (0,0,0) shall indicate the same phase as the last chip of the CRC check. The other seven combinations of (y2 y1 y0) shall be defined with respect to this reference phase as shown in Figure 16.

The mapping from BCC outputs to 8-PSK constellation points is determined by a pseudo-random cover sequence. The cover sequence is the same one as described in Section G.4.6.6. The current binary value of this sequence at every given point in time is taken as s in Figure 16. The mapping is shown in Figure 16.

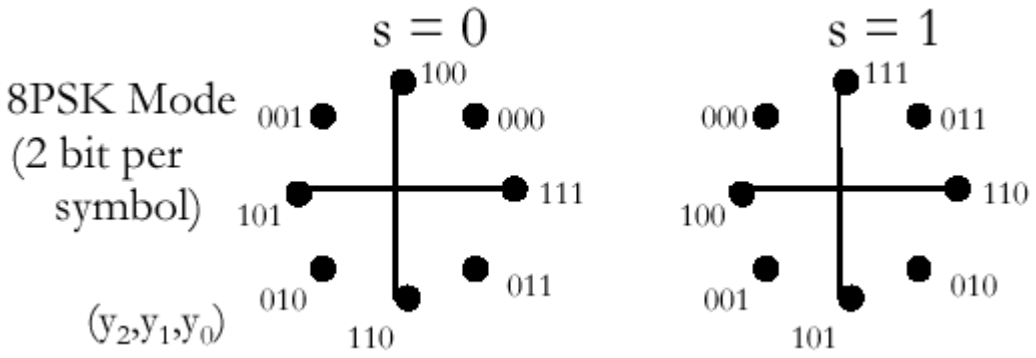

Figure 16. Cover Code Mapping for PBCC-22.

G.4.6.7.1 Modifications for PBCC-33 Data Modulation

The existing IEEE 802.11b standard is based upon an 11 Msps symbol rate and a bandwidth occupancy of 20 MHz. In terms of modern digital communications techniques such as pulse shaping and adaptive equalization, a more aggressive symbol rate in the same bandwidth is practical. However, in order to deal with inter-operability with existing networks, the structure of the preamble, including the symbol rate of the preamble, must not change. A viable method to address these issues is to transmit an 11Msps preamble followed by a higher symbol rate encoded

data rate. Means and issues involving the switch in the clock are addressed in this presentation. The suggested increase in rate by 50% to 16.5 Msps yields a data rate of 33 Mbps.

When the clock is switched from 11Msps to 16.5 Msps the following clock switching structure is used:

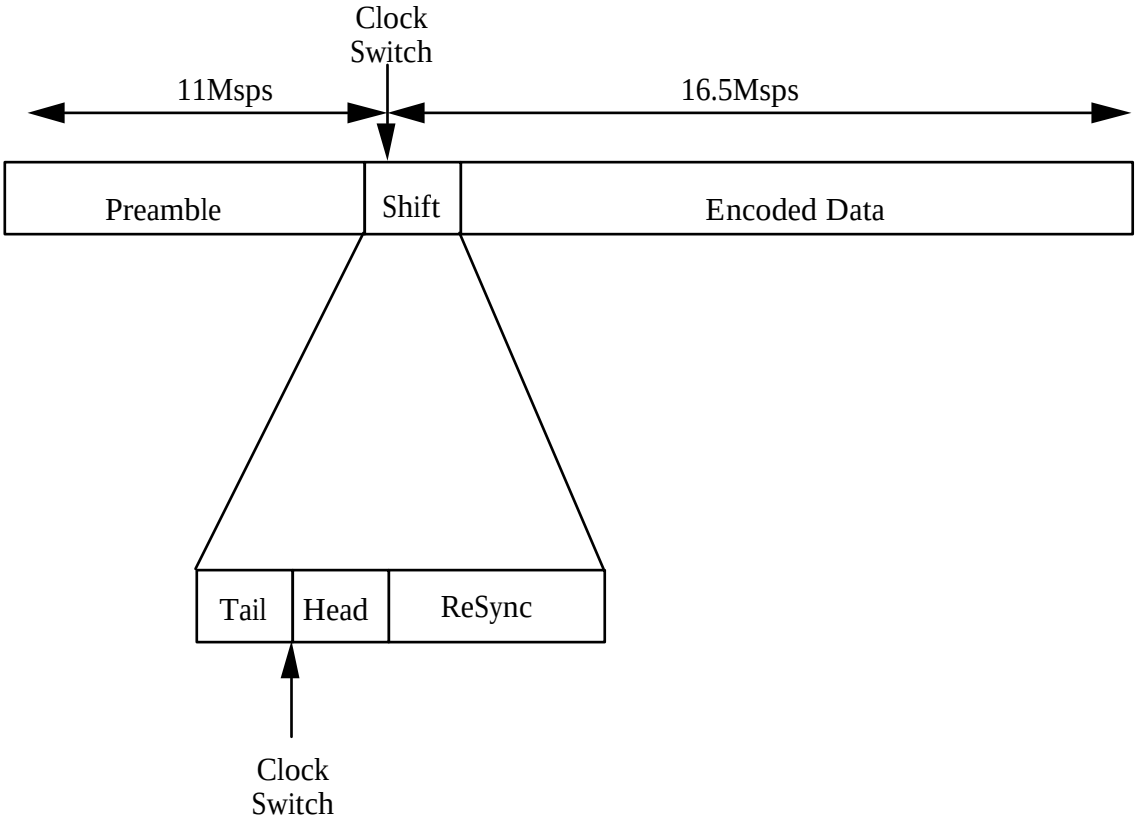

The tail is 2 clock cycles at 11Msps and the head is 3 clock cycles at 16.5 Msps. The resync is 9 clock cycles at 16.5 Msps. The total clock switching time is 10 clock cycles at 11 Msps.

射 频 和 天 线 设 计 培 训 课 程 推 荐

易迪拓培训(www.edatop.com)由数名来自于研发第一线的资深工程师发起成立，致力并专注于微波、射频、天线设计研发人才的培养；我们于 2006 年整合合并微波 EDA 网(www.mweda.com)，现已发展成为国内最大的微波射频和天线设计人才培养基地，成功推出多套微波射频以及天线设计经典培训课程和 ADS、HFSS 等专业软件使用培训课程，广受客户好评；并先后与人民邮电出版社、电子工业出版社合作出版了多本专业图书，帮助数万名工程师提升了专业技术能力。客户遍布中兴通讯、研通高频、埃威航电、国人通信等多家国内知名公司，以及台湾工业技术研究院、永业科技、全一电子等多家台湾地区企业。

易迪拓培训推荐课程列表： http://www.edatop.com/peixun/tuijian/

射频工程师养成培训课程套装

该套装精选了射频专业基础培训课程、射频仿真设计培训课程和射频电路测量培训课程三个类别共 30 门视频培训课程和 3 本图书教材；旨在引领学员全面学习一个射频工程师需要熟悉、理解和掌握的专业知识和研发设计能力。通过套装的学习，能够让学员完全达到和胜任一个合格的射频工程师的要求…

课程网址：http://www.edatop.com/peixun/rfe/110.html

手机天线设计培训视频课程

该套课程全面讲授了当前手机天线相关设计技术，内容涵盖了早期的外置螺旋手机天线设计，最常用的几种手机内置天线类型——如 monopole 天线、PIFA 天线、Loop 天线和 FICA 天线的设计，以及当前高端智能手机中较常用的金属边框和全金属外壳手机天线的设计；通过该套课程的学习，可以帮助您快速、全面、系统地学习、了解和掌握各种类型的手机天线设计，以及天线及其匹配电路的设计和调试...

课程网址： http://www.edatop.com/peixun/antenna/133.html

WiFi 和蓝牙天线设计培训课程

该套课程是李明洋老师应邀给惠普 (HP)公司工程师讲授的 3 天员工内训课程录像，课程内容是李明洋老师十多年工作经验积累和总结，主要讲解了 WiFi 天线设计、HFSS 天线设计软件的使用，匹配电路设计调试、矢量网络分析仪的使用操作、WiFi 射频电路和 PCB Layout 知识，以及 EMC 问题的分析解决思路等内容。对于正在从事射频设计和天线设计领域工作的您，绝对值得拥有和学习！…

课程网址：http://www.edatop.com/peixun/antenna/134.html

CST 学习培训课程套装

该培训套装由易迪拓培训联合微波 EDA 网共同推出，是最全面、系统、专业的 CST 微波工作室培训课程套装，所有课程都由经验丰富的专家授课，视频教学，可以帮助您从零开始，全面系统地学习 CST 微波工作的各项功能及其在微波射频、天线设计等领域的设计应用。且购买该套装，还可超值赠送 3 个月免费学习答疑…

课程网址：http://www.edatop.com/peixun/cst/24.html

HFSS 学习培训课程套装

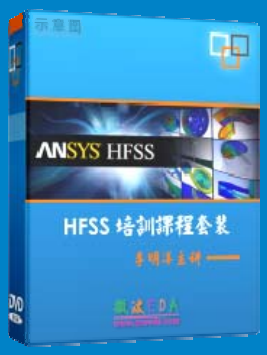

该套课程套装包含了本站全部 HFSS 培训课程，是迄今国内最全面、最专业的 HFSS 培训教程套装，可以帮助您从零开始，全面深入学习 HFSS 的各项功能和在多个方面的工程应用。购买套装，更可超值赠送 3 个月免费学习答疑，随时解答您学习过程中遇到的棘手问题，让您的 HFSS 学习更加轻松顺畅…

课程网址：http://www.edatop.com/peixun/hfss/11.html

ADS 学习培训课程套装

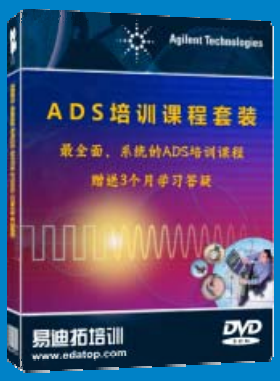

该套装是迄今国内最全面、最权威的 ADS 培训教程，共包含 10 门 ADS 学习培训课程。课程是由具有多年 ADS 使用经验的微波射频与通信系统设计领域资深专家讲解，并多结合设计实例，由浅入深、详细而又全面地讲解了 ADS 在微波射频电路设计、通信系统设计和电磁仿真设计方面的内容。能让您在最短的时间内学会使用 ADS，迅速提升个人技术能力，把 ADS 真正应用到实际研发工作中去，成为 ADS 设计专家...

课程网址： http://www.edatop.com/peixun/ads/13.html

我们的课程优势：

※ 成立于 2004 年，10 多年丰富的行业经验，

※ 一直致力并专注于微波射频和天线设计工程师的培养，更了解该行业对人才的要求

※ 经验丰富的一线资深工程师讲授，结合实际工程案例，直观、实用、易学

联系我们：

※ 易迪拓培训官网：http://www.edatop.com

※ 微波 EDA 网：http://www.mweda.com

※ 官方淘宝店：http://shop36920890.taobao.com